Soneplex

INSTALLATION AND VERIFICATION GUIDE

HMS-358 List 1
Part Number: 150-2209-01
CLEI Code: VAMXDG0D

HMS-358 List 2
Part Number: 150-2209-02
CLEI Code: VAMXDH0D

Revision History of This Practice

To order copies of this document, use document catalog number LTPH-SM-1014-03.

Issue	Release Date	Revisions Made
3	January 12, 2001	Initial release.

USING THIS TECHNICAL PRACTICE

The following conventions are used in this practice:

- `Monospace type` indicates screen text.
- Keys you press are indicated by small icons such as Y or ENTER. Key combinations to be pressed simultaneously are indicated with a plus sign as follows: CTRL + ESC.
- Items you select are in **bold**.
- Three types of messages, identified by icons, appear in text.

Notes contain information about special circumstances.

Cautions indicate the possibility of equipment damage or personal injury.

The Electrostatic Discharge (ESD) symbol indicates that a device or assembly is susceptible to damage from electrostatic discharge.

ABOUT THIS GUIDE

This guide details a typical, step-by-step installation and provides for a final system verification. For detailed information about specific system components, refer to the technical practice for that component.

An abbreviated version of the installation and verification procedure for each configuration is located at the end of this practice (see "Project Member Signatures" on page 99). You can pull out the checklist from this practice, verify the installation, sign where appropriate, and file the list in a safe place.

RELATED DOCUMENTATION

Catalog/Document Number	Title
400-100-100-xx	TL1 Command Set Reference
150-357-200-xx	HXU-357 List 1 Multiplexer Unit
150-358-100-xx	HXU-358 List 1 Multiplexer Unit
150-359-100-xx	HXU-359 List 1 Multiplexer Unit
150-369-100-xx	HXU-369 List 1 Multiplexer Unit
150-357-100-xx	HFA-357 List 1 Fan Assembly Unit
100-319-200-xx	HTC-319 List 1 Test Card
350-319-200-xx	HCC-319 List 1 Cut-through Card
350-319-201-xx	HCC-319 List 2 Cut-through Card
150-319-107-xx	HMU-319 List 7 and 7A

For information about line units, doublers, remotes and management units, refer to the appropriate practice for the product model number.

SAFETY WARNINGS AND NOTICES

The DC power supply feeds of the enclosure must be connected to either (1) -48 VDC SELV sources or (2) -48 VDC sources which are electrically isolated from the AC sector and reliably connected to earth. The source's fault current capacity shall be lower than 50 A, or an appropriate overcurrent protection, rated 5 A, must be provided on each -48 Vdc conductor. The overcurrent protection can also be used as a cut-off switch if another disconnect device is not installed.

This equipment may be provided with a module that incorporates laser source(s). Refer to the module's documentation for detailed safety information.

The telemetry I/O must be connected to either a SELV source or a ELV source that is electrically isolated from the AC sector and reliably connected to earth.

The metallic telecommunication interface should not leave the building premises unless connected to telecommunication devices providing primary and secondary protection.

AVIS ET AVERTISSEMENTS DE SÉCURITÉ

Les alimentations CC du boîtier doivent être branchées soit (1) à des sources 48 Vcc TBTS ou (2) à des sources qui sont isolées électriquement du secteur ca et qui sont reliées à la terre de façon fiable. Le courant de faute des sources doit être inférieur à 50 A ou des protections appropriées contre les sur-courants, spécifiée 5 A doivent êtres installées sur chaque conducteur -48 Vcc. La protection sur-courant doit aussi servir d'interrupteur si un interrupteur n'est pas installé.

Cet équipement peut être fournit avec des modules qui peuvent contenir des sources LASER. Se référer à la documentation du module pour plus d'information.

Les E/S de télémétrie doivent être branchées soit (1) à une source TBTS ou (2) à une source qui est isolée électriquement du secteur ca et qui est reliée à la terre de façon fiable.

Les interfaces métalliques de télécommunication ne doivent pas quitter le bâtiment à moins d'êtres reliés aux dispositifs de télécommunication assurant la protection primaire et secondaire.

TABLE OF CONTENTS

LIST OF FIGURES

LIST OF TABLES

INTRODUCTION

DOCUMENT SCOPE

This guide provides basic step-by-step instructions for installing several different shelf configurations and establishing a working system. Once you have completed the basic installation and verified that your system is functioning properly, you can refer to the technical practices for the individual components. The technical practices provide comprehensive configuration and technical information that will help you further define system parameters to meet your particular system requirements.

To use this practice:

- Follow the steps provided in the order in which they are presented, beginning with the section entitled "Before You Begin" on page 3.
- Tabbed sections are provided for chassis cabling and multiplexer installations. Based upon your choice of multiplexer and chassis configuration, select the sections that apply to your system installation.
- Place a check mark after each installation task you complete, and then sign your name in the places indicated after each section you complete.

This is a basic installation guide that is designed to aid you in successful installation of the Wideband 3190 system. For more information about the individual components used in this installation procedure, refer to their respective technical practices.

SYSTEM OVERVIEW

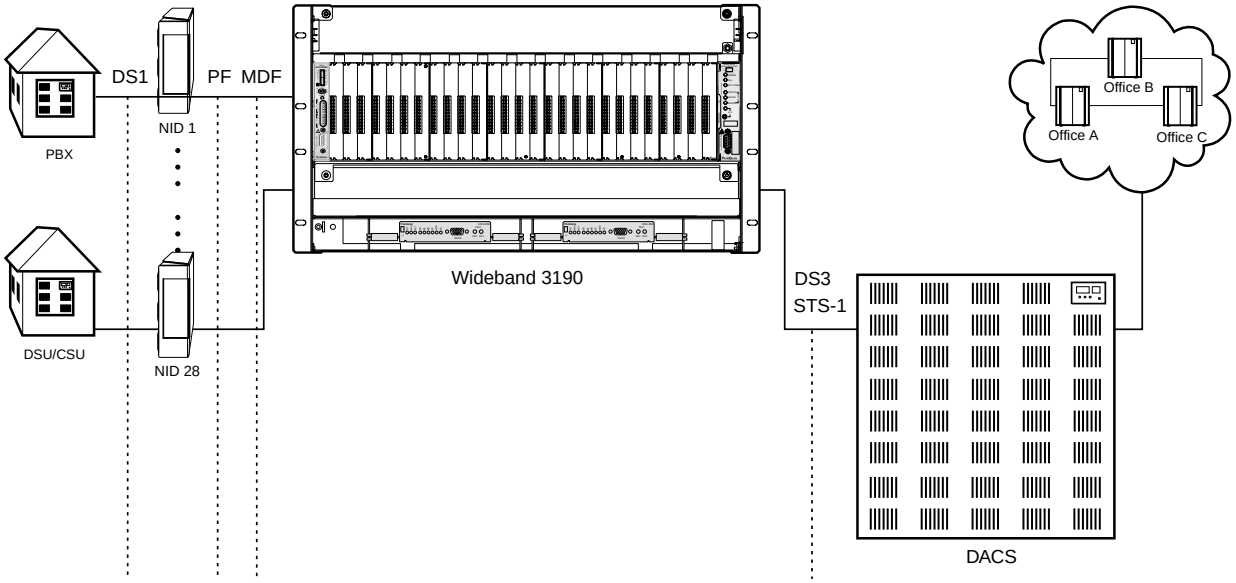

Figure 1. *System Overview*

The Wideband 3190 (HMS-358 List 1 and List 2) combines an industry-standard multiplexer function with the HiGain® High-bit-rate Digital Subscriber Line (HDSL) distribution system, providing the lowest-cost T1 delivery system available. The Wideband 3190 terminates 28 to 112 ports and multiplexes them into a single, high speed network interface with full metallic and electrical test access on all low speed ports. By selecting the multiplexer card, a variety of network interfaces can be accommodated such as DS3, STS-1, and OC-3. In addition, functions such as IP, Frame Relay, and data grooming can be supported through line card selection. Use of the same multiplexing (ACE) and DSL (HiGain) units found in ADC standalone products assure a versatile and cost-effective solution to your system requirements. This open architecture allows any industry-compliant 3192 line card to function in a Wideband 3190. (ADC recommends that third-party line cards be certified for compliance with a Wideband 3190.)

For management, both Terminal Access Option (TAO) and Transaction Language 1 (TL1) systems are supported on X.25, 10BASE-T, 10BASE-2, and RS-232 interfaces. The Wideband 3190 also features standard alarm relay contacts and accepts a redundant A/B office battery source.

The Wideband 3190 (with a full complement of remote equipment) can be configured with up to six chassis (up to 672 lines) in a 7-foot rack and meets NEBS requirements for CO equipment.

The Wideband 3190 is part of a protection switching application solution. Protection switching application solutions have the following system requirements: two HXU-358 Multiplexers (software version 1.04 or higher), an HMU-319 List 7A or List 7C Management Unit (software version 3.06 or higher), an HLU-316 List 6 Line Unit, and an HRE-206 Remote Enclosure equipped with a PSC-606 Protection Switching Controller. For more information, see “Protection Switching Controller Technical Practice,” PSC-606 List 1, section number 150-606-100-xx.

BEFORE YOU BEGIN

Prior to installing the Wideband 3190, it is important to prepare for the installation by

- Reviewing installation plans through establishing a Method of Procedure
- Unpacking and inspecting the system components, and
- Gathering the tools for the installation

REVIEWING INSTALLATION PLANS

Installation personnel, engineers, and Central Office (CO) supervisors, involved in the installation of the HMS-358, should participate in the preparation of a Method of Procedure (MOP) for approval by CO management.

ESTABLISHING A METHOD OF PROCEDURE

Following is a list of tasks and considerations that need to be addressed and mutually agreed upon before proceeding with installation:

- Assignment of personnel
- Installation tools and methods
- Protection requirements for personnel, equipment, and tools
- Evaluation of potential hazards that may affect service
- Scheduled time for installation
- Space requirements (see "Power Requirements" on page 88)
- Power requirements (see "Power Requirements" on page 88)
- Identification of procedures and tests required before connecting to working equipment
- Identification of work steps and any necessary notifications to CO personnel or engineers before work begins
- Assignment of individual system IDs for up to 32 managed systems
  (see "Setting the Shelf Identifier (Option D)" on page 35)
- Assignment of IP addresses for each installed system
  (see "Setting the Local IP Address (Option A)" on page 36)

UNPACKING AND INSPECTING THE SYSTEM COMPONENTS

Following is the list of components available for the Wideband 3190. Unpack your order and inspect for any damage that may have occurred during shipping. After inspecting each unit, sign for each item received. A notes sheet (see Table 2) has been provided to document any components not listed below.

Table 1. *System Components*

Check ✓	Item	Part Number	Installer Initial
Chassis			
❒	HMS-358 List 1 (3 row HMU, split power)	150-2209-01	
❒	HMS-358 List 2 (3 row HMU, redundant power)	150-2209-02	
Chassis Kit			
❒	One (1) LIU Module A line interface unit (for DS3 or STS-1)	150-2232-01	
❒	Two (2) mounting brackets	202-1684-01A	
❒	One (1) male, BNC 50 Ω terminator	651-1115-01	
❒	One (1) BNC T-adapter connector (J-P-J)	655-1022-01	
❒	Eight (8) 6-32 x $^{3}/_{16}$ screws	670-1006-03	
❒	Two (2) 8-32 x $^{1}/_{4}$ screws	670-1009-04	
❒	Ten (10) 12-24 x $^{1}/_{2}$ screws	670-1017-08	
❒	Twelve (12) 4.5-inch x .10-inch cable ties	674-1055-01	
❒	One (1) label holder	203-1038-01	
❒	One (1) circuit ID label	950-1093-01	
❒	One (1) installation and verification guide	800-358-101-01	
❒	Six (6) 4-40 x $^{1}/_{2}$ screws	670-1001-08	
❒	One (1) ground cable	120-1036-01	
Management Unit			
❒	HMU-319 List 7A (with installation guide)	150-1194-71	
Multiplexer			
❒	HXU-357 List 1 (with installation guide) DS3	150-2206-01	
❒	HXU-358 List 1 (with installation guide) DS3 (T1/E1)	150-2214-01	
❒	HXU-359 List 1 (with installation guide) STS-1	150-2207-01	
❒	HXU-369 List 1 (with installation guide) OC-3	150-2231-01	
Fan Assembly			
❒	HFA-357 List 1 (with installation guide)	150-2208-01	
❒	HFA-357 List 1 Air Filter	220-1015-01	
Line Interface Unit			
❒	Module B (required if you are installing an 10BASE-T HXU-357)	150-2233-01	

Continued

Table 1. *System Components (Continued)*

Check ✓	Item	Part Number	Installer Initial ✍
Cables			
❒	HCA-532 List 1 cable stub (50 ft.)	150-2218-01	
❒	HCA-532 List 2 cable stub (200 ft.)	150-2218-02	
Cut-through Card (for test purposes)			
❒	HCC-319 List 1 (with installation guide)	150-2216-01	
❒	HCC-319 List 2 (with installation guide)	150-2216-02	
Test Card			
❒	HTC-319 List 1 (with installation guide)	150-1284-01	

Table 2. *System Installation Notes*

Notes

For complete information about each component, refer to its technical practice. See "Appendix C - Product Support" on page 94 for information on how to obtain product information.

Be sure to have an IP address ready. It is necessary during installation.

MOUNTING THE CHASSIS

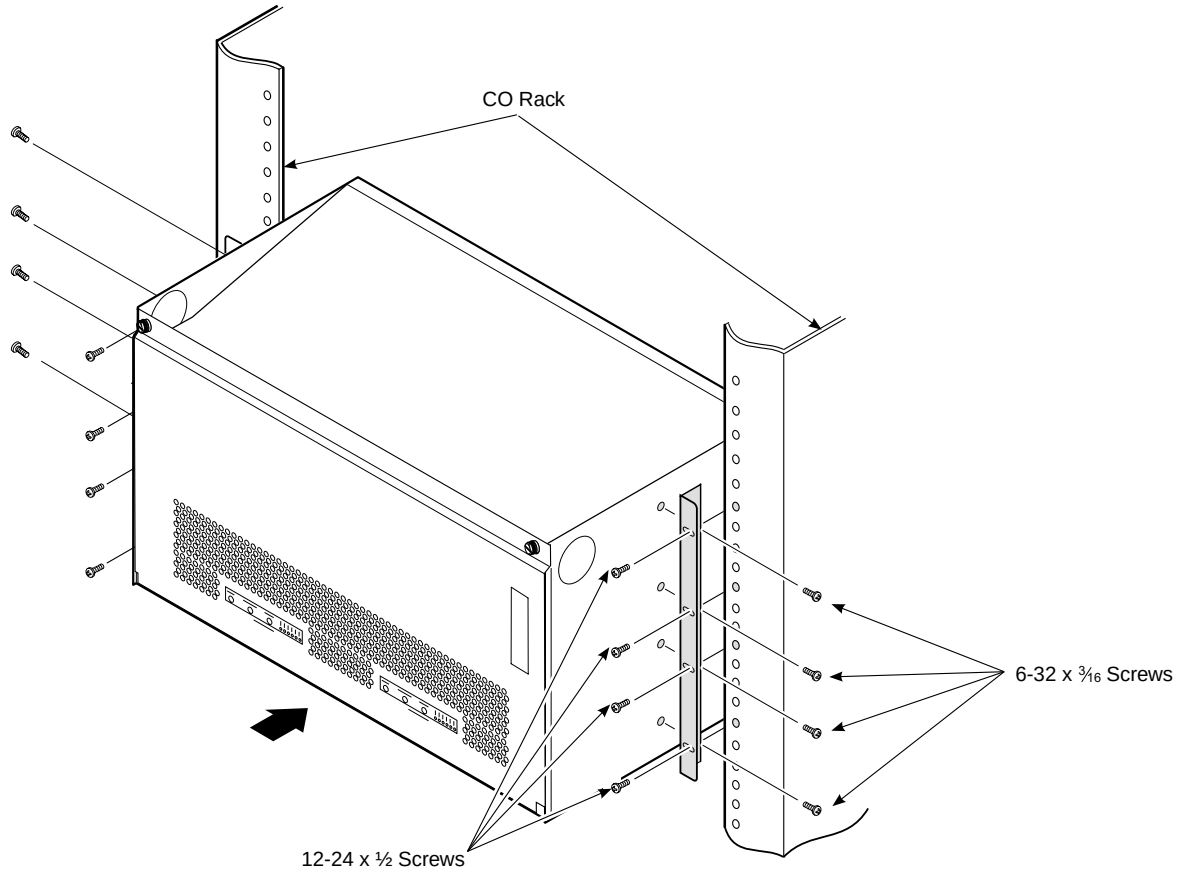

Figure 2. *Mounting the Wideband 3190 in a CO Rack*

Verify that the battery feed is disconnected.

For single shelf installation only: to fulfill NEBS requirements, a 4-inch gap above and below the unit is necessary. For more information on thermal characteristics, see "Power Requirements" on page 88.

Step	Procedure	Installer Check ✓
1	Install a mounting bracket on each side of the Wideband 3190 chassis using the four (6-32 x $^{3}/_{16}$) screws provided for each bracket. Mounting brackets and screws are contained in the installation kit. Torque to local codes.	❒
2	Align the chassis mounting bracket holes with the rack's vertical mounting holes.	❒

Continued

Step	Procedure (Continued)	Installer Check ✓
3	Mount the chassis in the rack. Install four each 12-24 x $^1/_2$ screws in each bracket and secure the chassis to the rack. Torque to local codes.	❒
4	If your configuration requires the installation of an HXU-357 List 1 then a 10BASE-T, Module line interface (LIU) is mandatory. Proceed to "Installing the LIU, Module B for the HXU-357 Multiplexer" on page 8. If your configuration does not use an HXU-357 10BASE-T, proceed to "Cabling the Chassis" on page 9.	❒

Installer Signature ✍	Date

INSTALLING THE LIU, MODULE B FOR THE HXU-357 MULTIPLEXER

The Line Interface Unit (LIU) Module A is preinstalled with the Wideband 3190. Module A is used for HXU-358 (DS3) and HXU-359 (STS-1) multiplexers, as well as for subtending STS-1 systems from an OC-3 multiplexer.

Module B is an option that is required when installing an HXU-357 List 1 DS3 multiplexer. The 10BASE-T module is required for use with the HXU-357 multiplexer.

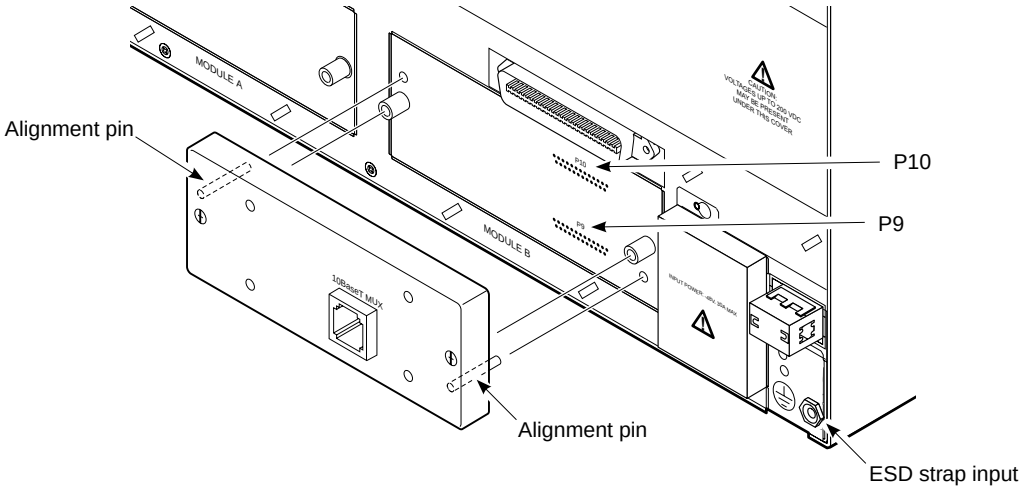

Figure 3. *Installing the 10BASE-T LIU, Module B*

HXU-357

Step	Procedure	Installer Check ✓
	Whenever installing or removing units from the HMS-358 chassis, be sure to wear an antistatic wrist strap and connect it to the ESD strap input above the HMS slot on the inside of the chassis.	
1	Align the guide pins from the 10BASE-T LIU with the guide holes in the chassis (see Figure 3).	❒
2	Press the module into the P10 and P9 connectors until firmly seated.	❒
3	Tighten the two locking screws using a #2 Phillips or slotted screwdriver.	❒
4	Proceed to "Cabling the Chassis" on page 9.	❒

Installer Signature ✍	Date

For 10BASE-T, use a Category-5 shielded cable.

CABLING THE CHASSIS

The Wideband 3190 allows for several network interface configurations:

- DS3 (see "Installing Interface Cables—DS3 or STS-1 Only" on page 13)
- STS-1 (see "Installing Interface Cables—DS3 or STS-1 Only" on page 13)
- DSX-1 (see "Installing Interface Cables—DSX-1 Only (H2TU-C List 2E)" on page 14)
- OC-3 (with up to two subtended STS-1 multiplexer systems, see "Installing Interface Cables—OC-3 (Dual Subtended STS-1 Multiplexers)" on page 15).

Depending on which of these shelf configurations you ordered, locate the proper cable installation procedures as detailed in "Selecting the Proper Installation Procedures" on page 12.

DRAIN WIRE AND CABLE TIE INSTALLATION

To satisfy Network Equipment-Building System (NEBS) requirements, it is necessary to connect a drain wire from a female amphenol cable connector to a male amphenol backplane connector. Cable ties are included in each kit to secure the cables to the backplane. The following procedure should be repeated for each amphenol connector.

The grounding of shielded cables should always conform to local codes. To avoid ground loops, confirm that all shielded cables are grounded at only one end.

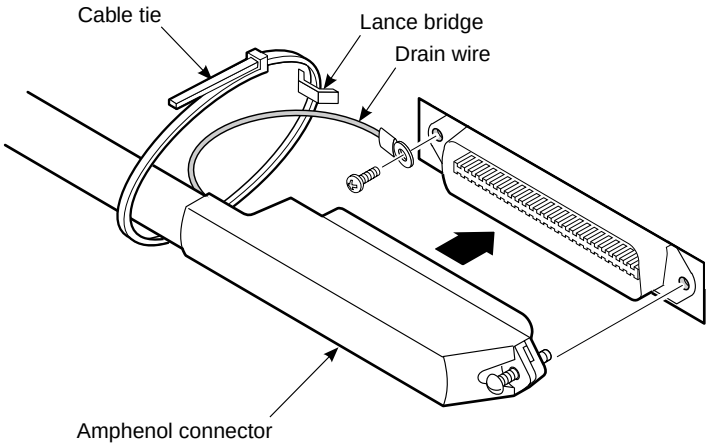

Figure 4. *Installing the Drain Wire and Cable Tie for All Amphenol Connectors*

Step	Procedure
1	Attach the drain wire of the female amphenol cable connector to the screw hole of the male amphenol backplane connector and tighten the drain wire to the backplane with one 4-40 x $^1/_2$ screw.
2	Connect the female amphenol cable connector to the male amphenol backplane connector.
3	Tighten the retaining screw (the screw encased within the cable) into the screw hole of the male amphenol backplane connector.
4	Lace a cable tie through the lance bridge on the rear cover, wrap the tie around the female amphenol cable, thread the tip of the tie through the eye of the tie, and then pull the tip of the tie until the cable tie is completely snug.

CABLE CONNECTOR PINOUTS

Following are a list of pinouts for 16/16 and 25/7 for 50- and 200-foot cable connectors (see Table 3, “Cable Connector Pinout and Color Code (16/16 Cable),” on page 11 and Table 4, “Cable Connector Pinout and Color Code (25/7 Cable),” on page 11).

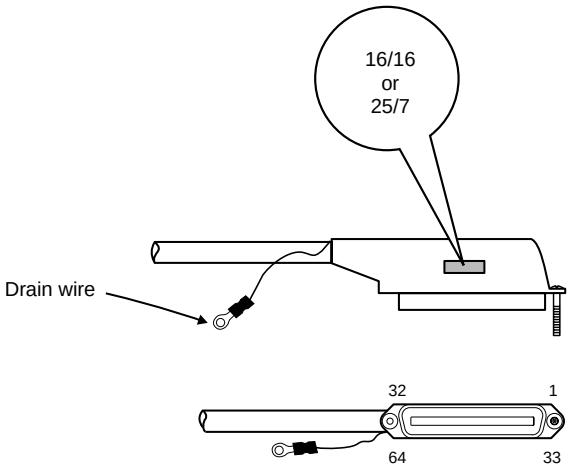

Figure 5. *50-foot (16/16 or 25/7) or 200-foot (16/16 or 25/7) Cable Connectors*

Table 3. *Cable Connector Pinout and Color Code (16/16 Cable)*

	Ring Pins			Tip Pins		
	Color Code	**Connector Pin Number**	**Slot**	**Connector Pin Number**	**Slot**	**Color Code**
BINDER #1 (BLUE)	Blue/White	1	1	33	1	White/Blue
	Orange/White	2	2	34	2	White/Orange
	Green/White	3	3	35	3	White/Green
	Brown/White	4	4	36	4	White/Brown
	Slate/White	5	5	37	5	White/Slate
	Blue/Red	6	6	38	6	Red/Blue
	Orange/Red	7	7	39	7	Red/Orange
	Green/Red	8	8	40	8	Red/Green
	Brown/Red	9	9	41	9	Red/Brown
	Slate/Red	10	10	42	10	Red/Slate
	Blue/Black	11	11	43	11	Black/Blue
	Orange/Black	12	12	44	12	Black/Orange
	Green/Black	13	13	45	13	Black/Green
	Brown/Black	14	14	46	14	Black/Brown
	Slate/Black	15	15	47	15	Black/Slate
	Blue/Yellow	16	16	48	16	Yellow/Blue
BINDER #2 (ORANGE)	Blue/White	17	17	49	17	White/Blue
	Orange/White	18	18	50	18	White/Orange
	Green/White	19	19	51	19	White/Green
	Brown/White	20	20	52	20	White/Brown
	Slate/White	21	21	53	21	White/Slate
	Blue/Red	22	22	54	22	Red/Blue
	Orange/Red	23	23	55	23	Red/Orange
	Green/Red	24	24	56	24	Red/Green
	Brown/Red	25	25	57	25	Red/Brown
	Slate/Red	26	26	58	26	Red/Slate
	Blue/Black	27	27	59	27	Black/Blue
	Orange/Black	28	28	60	28	Black/Orange
	Green/Black	29	29	61	29	Black/Green
	Brown/Black	30	30	62	30	Black/Brown
	Slate/Black	31	31	63	31	Black/Slate
	Blue/Yellow	32	32	64	32	Yellow/Blue

Table 4. *Cable Connector Pinout and Color Code (25/7 Cable)*

	Ring Pins			Tip Pins		
	Color Code	**Connector Pin Number**	**Slot**	**Connector Pin Number**	**Slot**	**Color Code**
BINDER #1 (BLUE)	Blue/White	1	1	33	1	White/Blue
	Orange/White	2	2	34	2	White/Orange
	Green/White	3	3	35	3	White/Green
	Brown/White	4	4	36	4	White/Brown
	Slate/White	5	5	37	5	White/Slate
	Blue/Red	6	6	38	6	Red/Blue
	Orange/Red	7	7	39	7	Red/Orange
	Green/Red	8	8	40	8	Red/Green
	Brown/Red	9	9	41	9	Red/Brown
	Slate/Red	10	10	42	10	Red/Slate
	Blue/Black	11	11	43	11	Black/Blue
	Orange/Black	12	12	44	12	Black/Orange
	Green/Black	13	13	45	13	Black/Green
	Brown/Black	14	14	46	14	Black/Brown
	Slate/Black	15	15	47	15	Black/Slate
	Blue/Yellow	16	16	48	16	Yellow/Blue
	Orange/Yellow	17	17	49	17	Yellow/Orange
	Green/Yellow	18	18	50	18	Yellow/Green
	Brown/Yellow	19	19	51	19	Yellow/Brown
	Slate/Yellow	20	20	52	20	Yellow/Slate
	Blue/Violet	21	21	53	21	Violet/Blue
	Orange/Violet	22	22	54	22	Violet/Orange
	Green/Violet	23	23	55	23	Violet/Green
	Brown/Violet	24	24	56	24	Violet/Brown
	Slate/Violet	25	25	57	25	Violet/Slate
BINDER #2 (ORANGE)	Blue/White	26	26	58	26	White/Blue
	Orange/White	27	27	59	27	White/Orange
	Green/White	28	28	60	28	White/Green
	Brown/White	29	29	61	29	White/Brown
	Slate/White	30	30	62	30	White/Slate
	Blue/Red	31	31	63	31	Red/Blue
	Orange/Red	32	32	64	32	Red/Orange

SELECTING THE PROPER INSTALLATION PROCEDURES

This practice divides the cable installation procedures of each shelf configuration into tabbed sections (see Figure 6). Select the tabbed section that applies to your configuration and only follow those procedures.

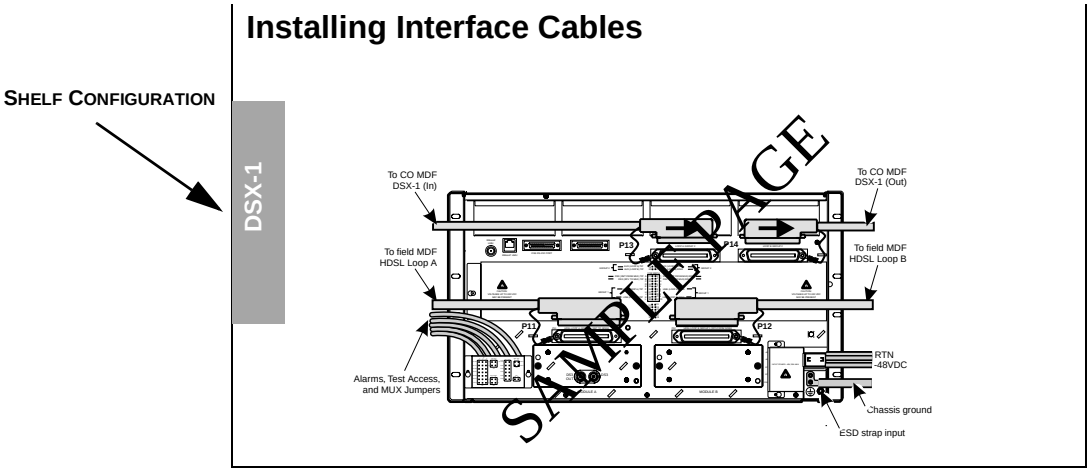

Figure 6. *Selecting the Proper Tabbed Section for Your Shelf Configuration*

INSTALLING INTERFACE CABLES—DS3 OR STS-1 ONLY

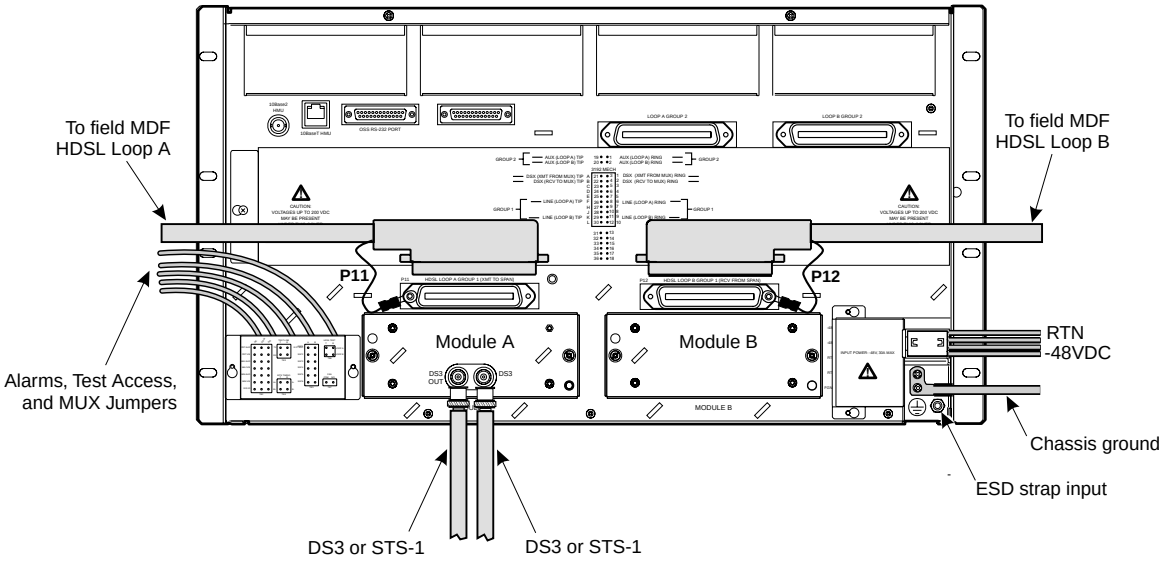

Figure 7. *Installing Cables for a DS3 or STS-1 Configured Shelf (Backplane View)*

Step	Procedure	Installer Check ✓
	Whenever installing or removing units from the HMS-358 chassis, be sure to wear an antistatic wrist strap and connect it to the ESD strap input.	
1	Connect the 32-pair shielded amphenol female connector to **P11**, HDSL LOOP A and route to the field MDF. See "Drain Wire and Cable Tie Installation" on page 9 for proper installation of all amphenol connectors.	❒
2	Connect the 32-pair shielded amphenol female connector to **P12**, HDSL LOOP B and route to the field MDF.	❒
3	Connect a DS3 coaxial cable to Module A DS3 IN connector.	❒
4	Connect a DS3 coaxial cable to Module A DS3 OUT connector.	❒
5	Proceed to "Wiring the Common Access Panel" on page 18.	❒

Installer Signature ✍	Date

DSX-1

INSTALLING INTERFACE CABLES—DSX-1 ONLY (H2TU-C LIST 2E)

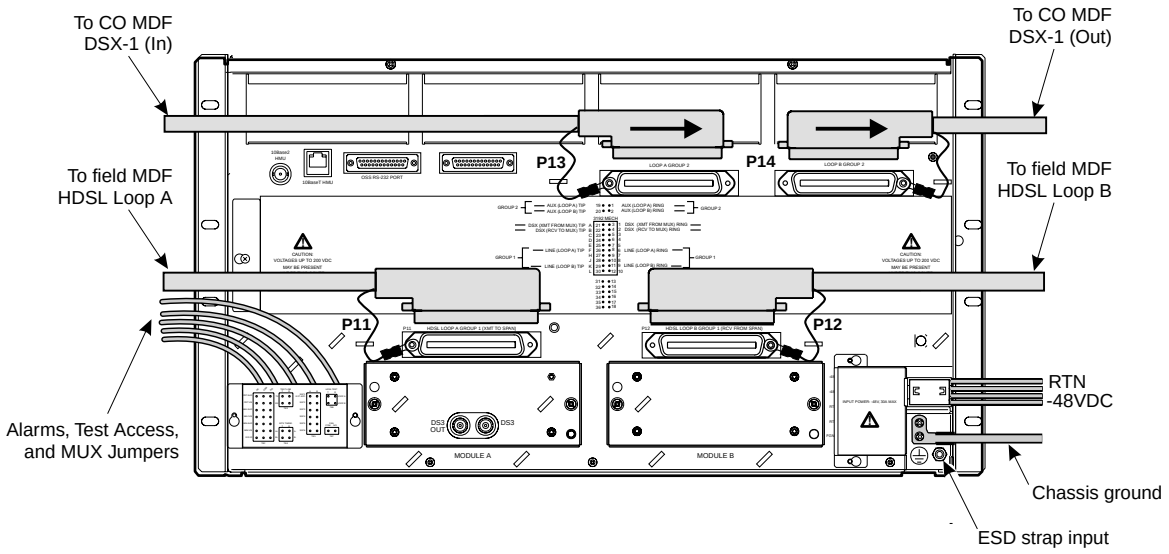

Figure 8. *Installing Cables for a DSX-1 Configured Shelf (Backplane View)*

Step	Procedure	Installer Check ✓
	Whenever installing or removing units from the HMS-358 chassis, be sure to wear an antistatic wrist strap and connect it to the ESD strap input.	
1	Connect the 32-pair shielded amphenol female connector to **P11**, HDSL LOOP A and route to the field MDF. See "Drain Wire and Cable Tie Installation" on page 9 for proper installation of all amphenol connectors.	❒
2	Connect the 32-pair shielded amphenol female connector to **P12**, HDSL LOOP B and route to the field MDF.	❒
3	Connect the 32-pair shielded amphenol female connector to **P13**, DSX-1 (IN) LINE CARD and route to the CO MDF.	❒
4	Connect the 32-pair shielded amphenol female connector to **P14**, DSX-1 (OUT) LINE CARD and route to the CO MDF.	❒
5	Proceed to "Wiring the Common Access Panel" on page 18.	❒

Installer Signature ✍	Date

This configuration does not require a multiplexer.

In the DSX-1 only configuration, an H2TU-C List 2E is required to access port 2.

INSTALLING INTERFACE CABLES—OC-3 (DUAL SUBTENDED STS-1 MULTIPLEXERS)

This procedure requires the installation of an HXU-369 multiplexer to complete. See "Installing the HXU-369 Multiplexer Card" on page 59 prior to starting this cable installation.

Prior to installing the interface cable, you must install a DS3 Module in the Module B location (see "Installing the DS3 LIU Module B" on this page).

INSTALLING THE DS3 LIU MODULE B

The DS3 LIU Module B must be installed with the Wideband 3190 for subtending STS-1 systems from an OC-3 multiplexer.

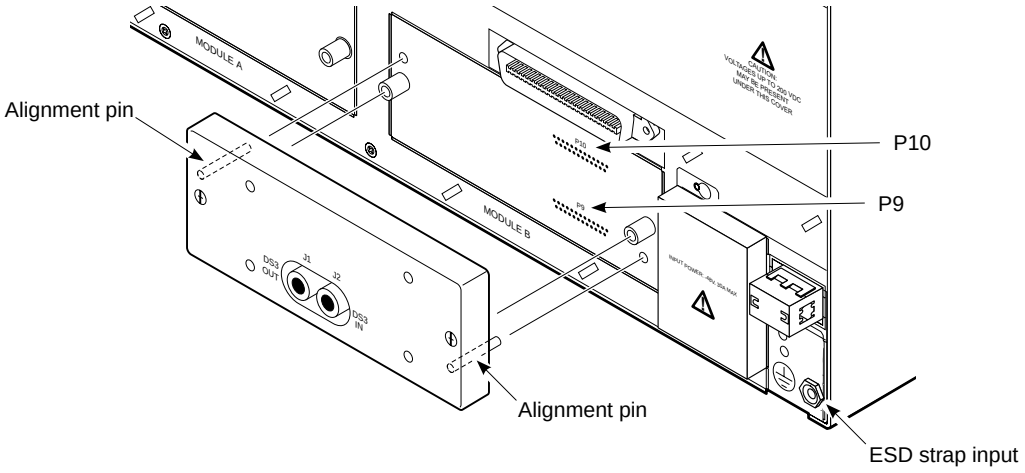

Figure 9. *Installing the DS3 LIU Module B*

Step	Procedure	Installer Check ✓
	Whenever installing or removing units from the HMS-358 chassis, be sure to wear an antistatic wrist strap and connect it to the ESD strap input above the HMS slot on the inside of the chassis.	
1	Align the guide pins from the DS3 LIU with the guide holes in the chassis (see Figure 3).	❒
2	Press the module into the P10 and P9 connectors until firmly seated.	❒
3	Tighten the two locking screws using a #2 Phillips or slotted screwdriver.	❒

Continued

OC-3

After installing the LIU, proceed the cable installation.

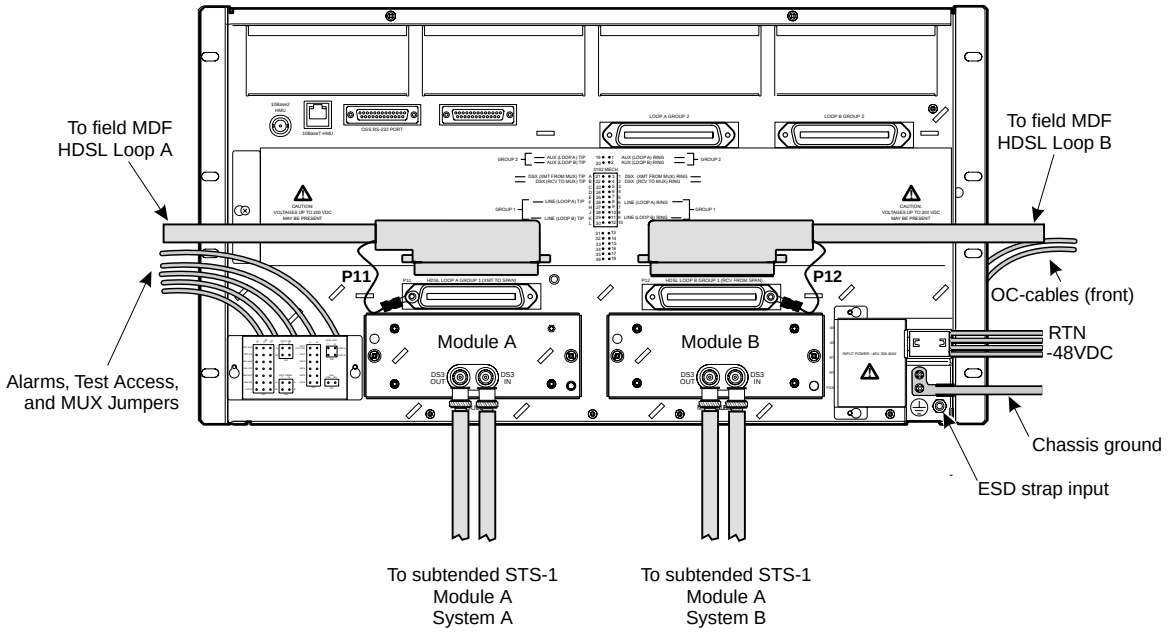

Figure 10. *Installing Cables for Dual Subtended STS-1 Multiplexers from an OC-3 Network (Backplane View)*

OC-3

Step	Procedure (Continued)	Installer Check ✓
4	Connect the 32-pair shielded amphenol female connector to **P11**, HDSL LOOP A and route to the field MDF. See "Drain Wire and Cable Tie Installation" on page 9 for proper installation of all amphenol connectors.	❒
5	Connect the 32-pair shielded amphenol female connector to **P12**, HDSL LOOP B and route to the field MDF.	❒
6	Connect the DS3 coaxial cable from System A DS3 OUT to the Module A DS3 IN connector of subtended STS-1, System A.	❒
7	Connect the DS3 coaxial cable from System A DS3 IN to the Module A DS3 OUT connector of subtended STS-1, System A.	❒
8	Connect the DS3 coaxial cable from System B DS3 OUT to the Module B DS3 IN connector of subtended STS-1, System B.	❒
9	Connect the DS3 coaxial cable from System B DS3 IN to the Module B DS3 OUT connector of subtended STS-1, System B.	❒

Continued

After installing the cables, proceed the OC-3 fiber-optic cabling instructions.

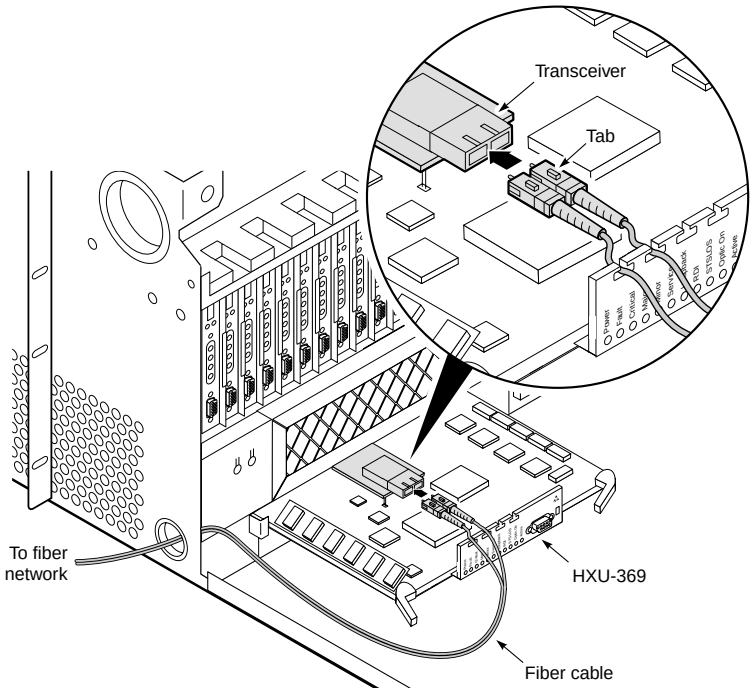

Figure 11. *Routing OC-3 Fiber-Optic Cables Through the Lower Access Hole (Left-Hand Side, Front View)*

Step	Procedure (Continued)	Installer Check ✓
	The steps the follow (Step 10 through Step 16) provide OC-3 fiber-optic cabling instructions that terminate at the multiplexer. This procedure requires a review of the HXU-369 multiplexer installation procedure. See "Installing the HXU-369 Multiplexer Card" on page 59 for more information.	
10	Route the network OC-3 fiber-optic cable through the access hole located on the lower, left-hand side of the chassis and bring the cable to the front of the chassis.	❒
11	Plug your ESD strap into the ESD input on the front of the chassis.	❒
12	Align the edges of the HXU-369 with the slot guides in the multiplexer tray.	❒
13	Grasping the card eject tabs, gently push the card halfway into the bay.	❒
14	Remove the protective caps from the OC-3 fiber-optic cables.	❒
15	Insert the fiber-optic-cable connectors into the transmit (TX) and receive (RX) transceiver receptacles on the piggybacked card. Route the cables through the inverted T slots in the HXU-369 front panel (see Figure 11). The inverted T slots provide a method of maintaining the correct cable bend ratio.	❒
16	Grasping the card eject tabs, gently push the card the remainder of the way into the bay.	❒
17	Proceed to "Wiring the Common Access Panel" on page 18.	❒

Installer Signature ✍	Date

OC-3

WIRING THE COMMON ACCESS PANEL

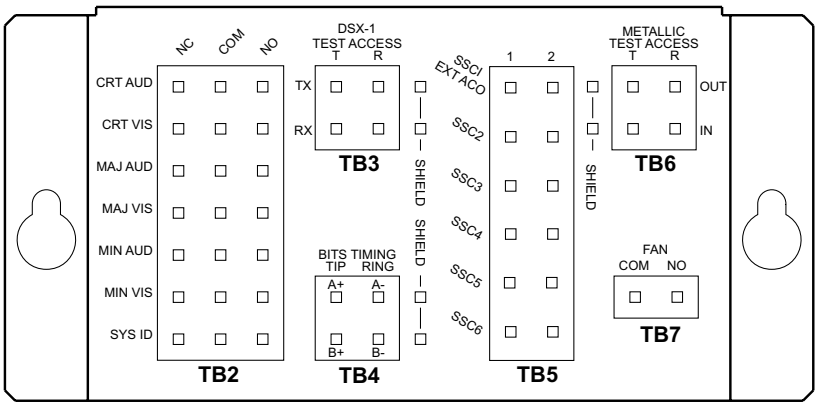

Figure 12. *Common Access Cover Plate*

Step	Procedure	Installer Check ✓
	Whenever installing or removing units from the HMS-358 chassis, be sure to wear an antistatic wrist strap and connect it to the ESD strap input.	
1	Loosen both screws on the Common Access cover plate (see Figure 12) with a No. 1 Phillips screwdriver and gently slide the cover up to remove it.	❒
2	Connect alarm relay wires from the CO alarm center to the wire wrap posts at the Management Alarm (**TB2**). Follow the CO site instructions for connecting alarm relays.	❒
3	Connect transmit (TX) tip and ring and receive (RX) tip and ring at the DSX-1 Test Access (**TB3**) block and the corresponding chassis shield posts to the external test head.	❒
4	If you are installing an HXU-359 multiplexer in your Wideband 3190, connect the Bits Timing (**TB4**) block Bits A, Bits B, and the corresponding chassis shield posts to your SONET clock synchronization source.	❒
5	If you have a requirement for an external alarm, such as an open door, use the User Configurable Alarm Inputs (**TB5**) block to wire the SSC1 EXT ACO (Special Signaling Channel 1 External Alarm Cutoff), the SSC2 (Special Signaling Channel 2), and the chassis shield to your third-party alarm.	❒
6	Wire COM pin and the NO pin of the Fan (**TB7**) block in series with an external rack fan. There is a dry contact closure between pins 1 and 2 when the internal air temperature of the HMS-358 reaches 80° F.	❒
7	Replace cover and tighten the screws.	❒
8	Proceed to "Installing the Power Cables" on page 19.	❒

Installer Signature ✍	Date

INSTALLING THE POWER CABLES

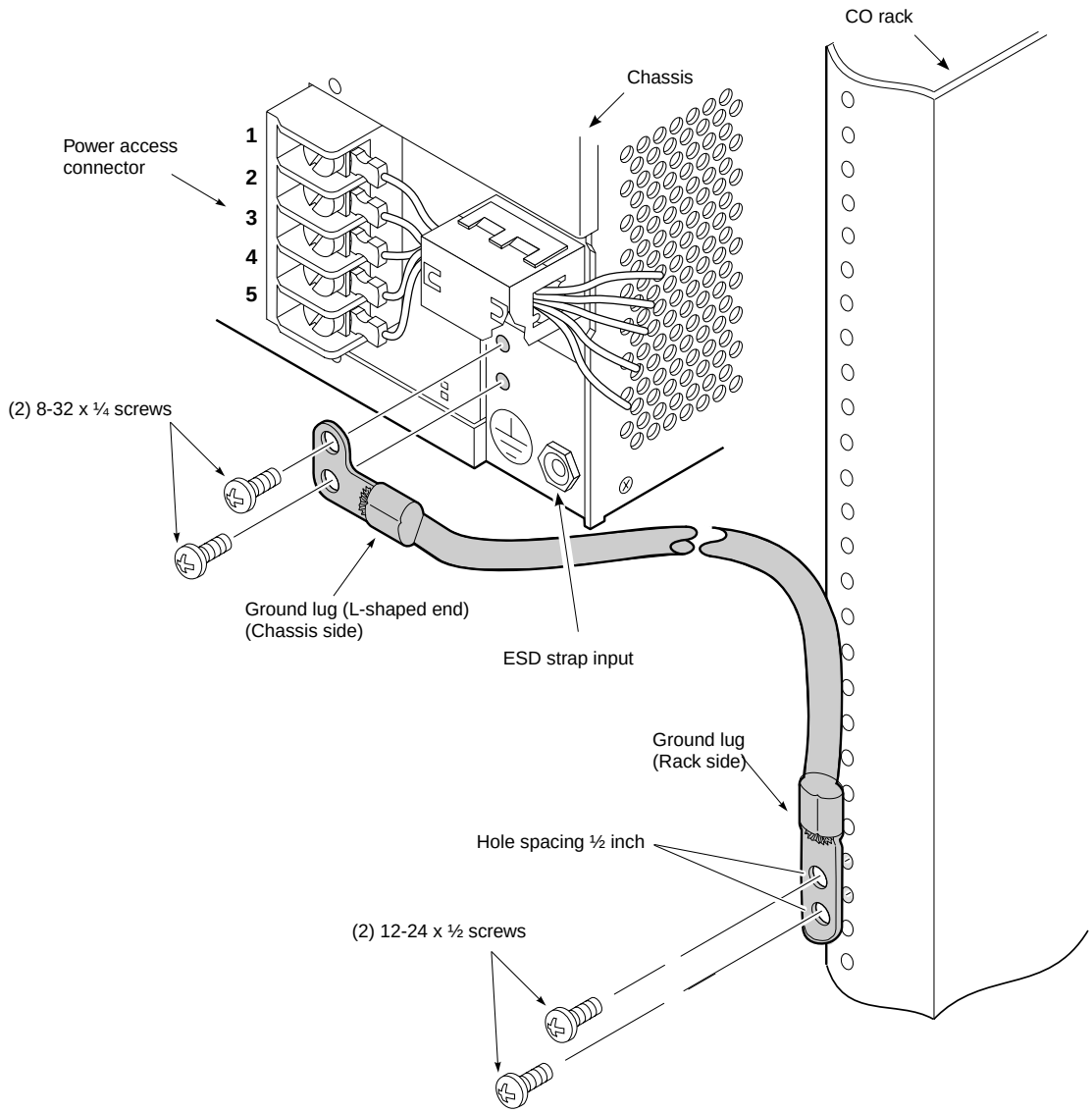

Figure 13. *Grounding the Chassis (Right-Hand Side, Rear View)*

Step	Procedure	Installer Check ✓
	Whenever installing or removing units from the HMS-358 chassis, be sure to wear an antistatic wrist strap and connect it to the ESD strap input.	
1	Verify fuses are removed from fuse panel.	❒
2	Remove the slide panel by loosening the two screws that secure it (two turns of the screw using a No. 1 Phillips should be sufficient). Slide panel approximately $^1/_4$-inch to the left to release the slide panel and lift to remove it.	❒

Continued

Step	Procedure (Continued)	Installer Check ✓
3	Attach the L-shaped end of the ground lug (see Figure 13 on page 19) using two 8-32 x $^{3}/_{16}$ screws to the rear of the chassis.	❒
4	Attach the ground lug (see Figure 13 on page 19) using two 8-32 x $^{3}/_{16}$ screws to the rear of the chassis.	❒
5	Attach the other end of the ground lug (see Figure 13 on page 19) using two 12-24 x $^{1}/_{2}$ screws to the CO rack using locally approved methods (6 AWG or larger cables require double screw connectors).	❒
6	Reduce EMI by prying open the ferite clamp (see Figure 14) with a slot screwdriver and route the battery feed wires through the clamp before connecting them to the Power Access.	❒

Continued

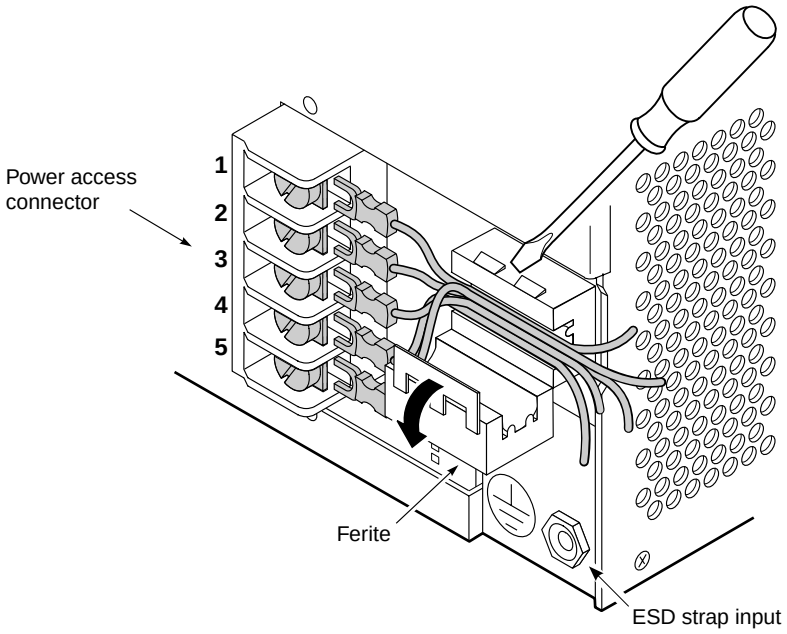

Figure 14. *Opening the Ferite and Routing the Battery Feed Wires (Right-Hand Side, Rear View)*

-48 VA Return and -48 VB Return are tied together on the backplane and are referenced as RTN on the Power Access connector.

Step	Procedure (Continued)	Installer Check ✓
	All connections to terminal block TB1 (Power Access connector) must be done to local codes.	
7	Attach a ring connector (or locally approved connector) to terminate the 12 AWG ground wire at frame ground (FGND) on the Power Access connector (if needed).	❒
8	Connect a 12 AWG gauge wire to the -48 V RTN terminal in position 3 (see Figure 14 on page 20) of the Power Access connector. Connect the opposite end of this wire to the battery return of the CO battery supply at the fuse panel. If a connector is required, conform to local code.	❒
9	Connect a 12 AWG gauge wire to the -48 V RTN terminal in position 4 (see Figure 14 on page 20) of the Power Access connector. Connect the opposite end of this wire to the battery return of the CO battery supply at the fuse panel. If a connector is required, conform to local code.	❒
10	Connect a 12 AWG gauge wire to the -48 VA terminal at position 1 (see Figure 14 on page 20) of the Power Access connector (for slots 1-14). Connect the opposite end of this wire to the -48 Vdc CO battery supply at the fuse panel. (Fuse is removed.) If a connector is required, conform to local code.	❒
11	Connect a 12 AWG gauge wire to the -48 VB terminal in position 2 (see Figure 14 on page 20) on the Power Access connector (for slots 15-28). Connect the opposite end of this wire to the -48 Vdc CO battery supply at the fuse panel. (Fuse is removed.)	❒
12	Install a fuse of appropriate value in the fuse panel tray, based on the power recommendations given in "Power Specifications" on page 87 and Table 21 on page 91.	❒
13	Close the ferite clamp.	❒
14	Connect the fuse panel to the office power supply according to CO guidelines.	❒
15	With a voltmeter, verify voltages on the Power Access connector (see Figure 14 on page 20). There should be -48 V across pins 1, -48 VA and RTN's 3 and 4 and pin 2, -48 VB and RTN's 3 and 4. Returns are tied together.	❒
16	Replace the slide panel that covers the Power Access connector by placing the cover over the screws and aligning the panel holes with the screws. Slide the panel $^1/_4$-inch to the right until it snaps into place, then tighten the screws.	❒
17	Proceed to "Connecting the Network Interface" on page 22.	❒

Installer Signature ✍	Date

CONNECTING THE NETWORK INTERFACE

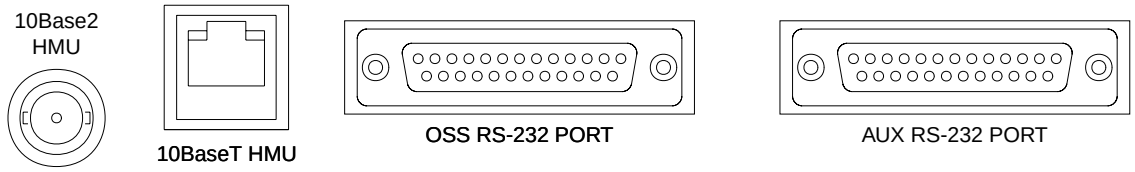

Figure 15. *Network Interface Connections*

For all network connections, shielded cables are required.
For 10BASE-T connections, Category-5 shielded cables are required.

Step	Procedure	Installer Check ✓
	Whenever installing or removing units from the HMS-358 chassis, be sure to wear an antistatic wrist strap and connect it to the ESD strap input.	
1	Determine the network interface for your application	Select One
	10BASE-2 (coaxial)	❒
	10BASE-T (Category-5)	❒
	DB-25 (modem)	❒
2	Connect the appropriate network interface cable (10BASE-2, 10BASE-T, or DB-25) coming from the network to the appropriate network interface connector located on the rear of the shelf (see Figure 15).	❒
	For connector pinouts, see Table 5 below through Table 8 on page 24.	
3	If your network uses a 10BASE-T interface, proceed to "Setting Up a 10BASE-T Configuration" on page 25. If your network uses a 10BASE-2 interface, proceed to "Setting Up a 10BASE-2 Configuration" on page 28.	❒

Installer Signature ✍	Date

Table 5. *Pinouts for 10BASE-2 Interface*

Pin	Description
Center	LAN
Shield	LAN-

Table 6. *Pinouts for 10BASE-T Interface*

Pin	Description
1	TD
2	TD-
3	RD
4	NC
5	NC
6	RD-
7	NC
8	NC

NC = no connection.

Table 7. *Pinouts for DB-25 OSS Interface (DTE)*

Pin	Description	Pin	Description
1	NC	14	NC
2	NMA TX	15	NMA TCLK
3	NMA RX	16	NC
4	NMA RTS-	17	NMA RCLK
5	NMA CTS-	18	NC
6	NMA DSR-	19	NC
7	NMA RTN	20	NMA DTR-
8	NC	21	NC
9	NC	22	NC
10	NC	23	NC
11	NC	24	OS TCLK
12	NC	25	NC
13	NC		

NC = no connection.

Table 8. *Pinouts for DB-25 AUX Interface (DTE)*

Pin	Description	Pin	Description
1	NC	14	NC
2	AUX TX	15	NC
3	AUX2 RX	16	NC
4	AUX2 RTS-	17	NC
5	AUX2 CTS-	18	NC
6	AUX2 DSR-	19	NC
7	AUX2 RTN	20	AUX2 DTR-
8	NC	21	NC
9	NC	22	NC
10	NC	23	NC
11	NC	24	NC
12	NC	25	NC
13	NC		

NC = no connection.

SETTING UP A 10BASE-T CONFIGURATION

The Wideband 3190 can be implemented as a single shelf or can be connected by an external hub to other shelves in a 10BASE-T network.

SINGLE SHELF 10BASE-T CONFIGURATION

Figure 16 applies only to an HXU-357 multiplexer for TL1 messaging.

Figure 16 shows a single shelf 10BASE-T configuration. Use the shielded twisted pair cable (Category-5) provided with your hub to connect the HXU to the HMU.

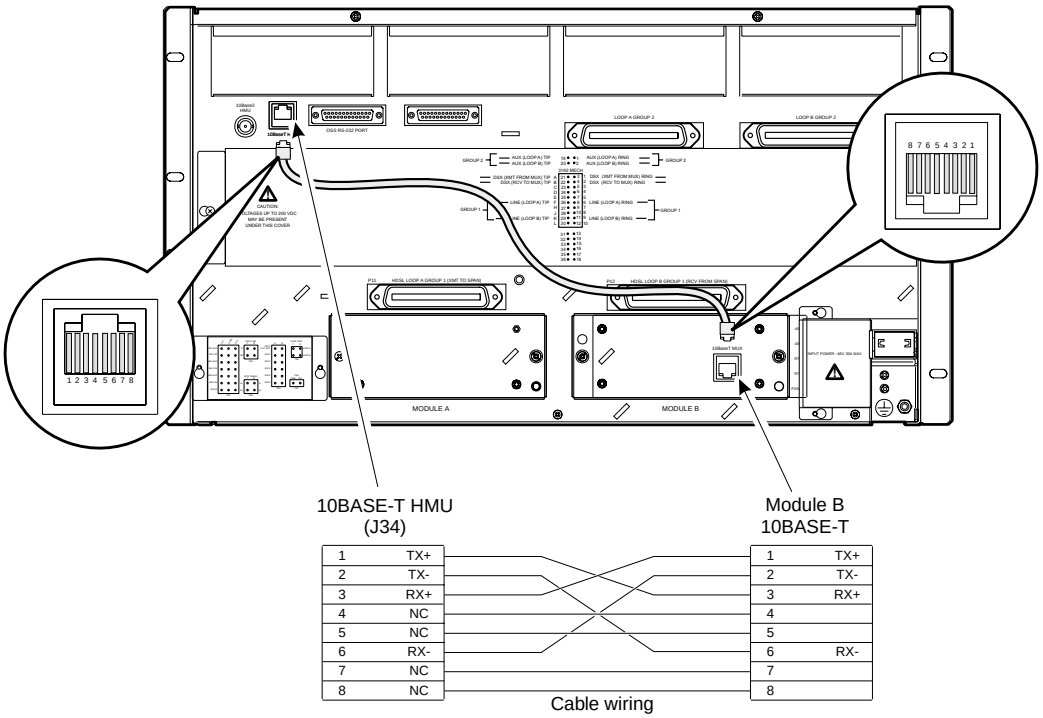

Figure 16. *Single Shelf 10BASE-T Configuration*

Step	Procedure	Installer Check ✓
	Figure 16 shows a 10BASE-T single shelf configuration using an HXU-357. For multishelf 10BASE-T configurations, see "Multishelf 10BASE-T Configuration" on page 27.	
1	Connect a terminal to the HMU craft port or to the OSS port (J30) on the back plane of the Wideband 3190.	❒

HXU-357

Step	Procedure (Continued)	Installer Check ✓
2	Proceed to "Installing a Management Unit (HMU)" on page 30.	❒

Installer Signature ✍	Date

MULTISHELF 10BASE-T CONFIGURATION

Figure 16 shows a multishelf 10BASE-T configuration. Use shielded twisted pair cables (Category-5) to connect each shelf to the hub.

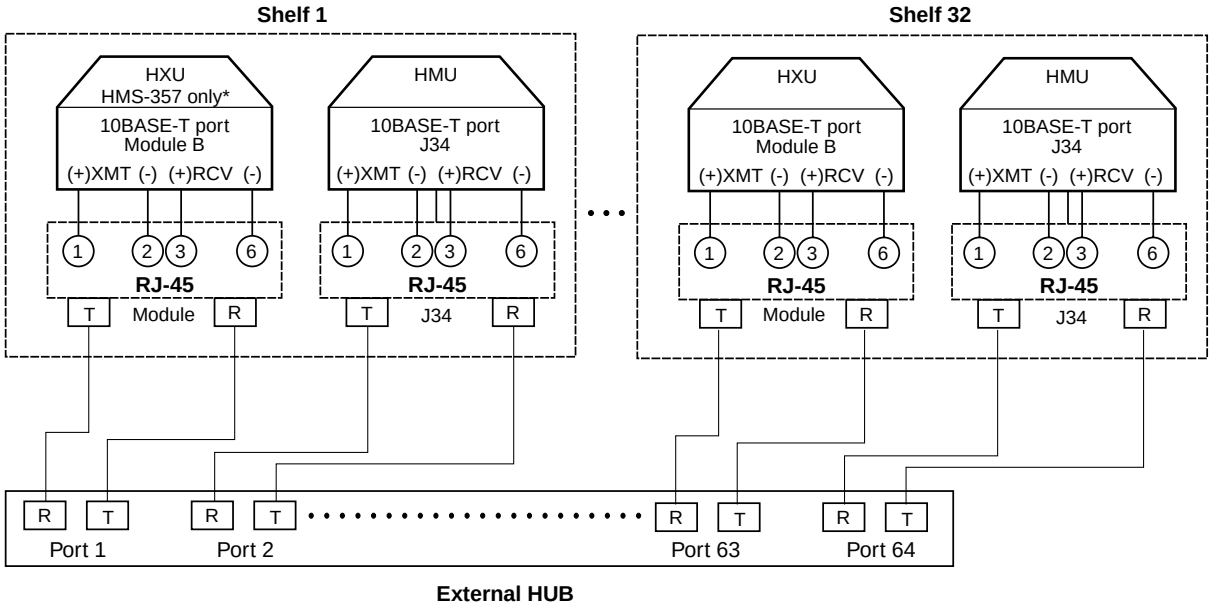

Figure 17. *Multishelf 10BASE-T Configuration*

Step	Procedure	Installer Check ✓
	When installing an HXU-357, a 10BASE-T module must be used in the Module B slot.	
1	Connect each CO shelf to an external hub using shielded twisted pair cable (Category-5). The maximum length of each twisted pair is 328 ft. (100 m)	❒
2	Connect a terminal to the HMU-319 craft port or to an OSS port (J30) on any of the shelves in the network.	❒
3	Proceed to "Installing a Management Unit (HMU)" on page 30.	❒

Installer Signature ✍	Date

SETTING UP A 10BASE-2 CONFIGURATION

The Wideband 3190 can be connected by an external hub to other shelves in a 10BASE-2 network.

MULTISHELF 10BASE-2 CONFIGURATION

Figure 18 shows a multishelf 10BASE-2 configuration connection to an X.25 network. For more information on setting up an X.25 connection, refer to the HMU-319 List 5A, List 7A, and List 7C Technical Practice, document catalog number LTPH-TP-1021-03.

The Wideband 3190 configured for 10BASE-T does not support HXU-357 multiplexer TL1 messaging.

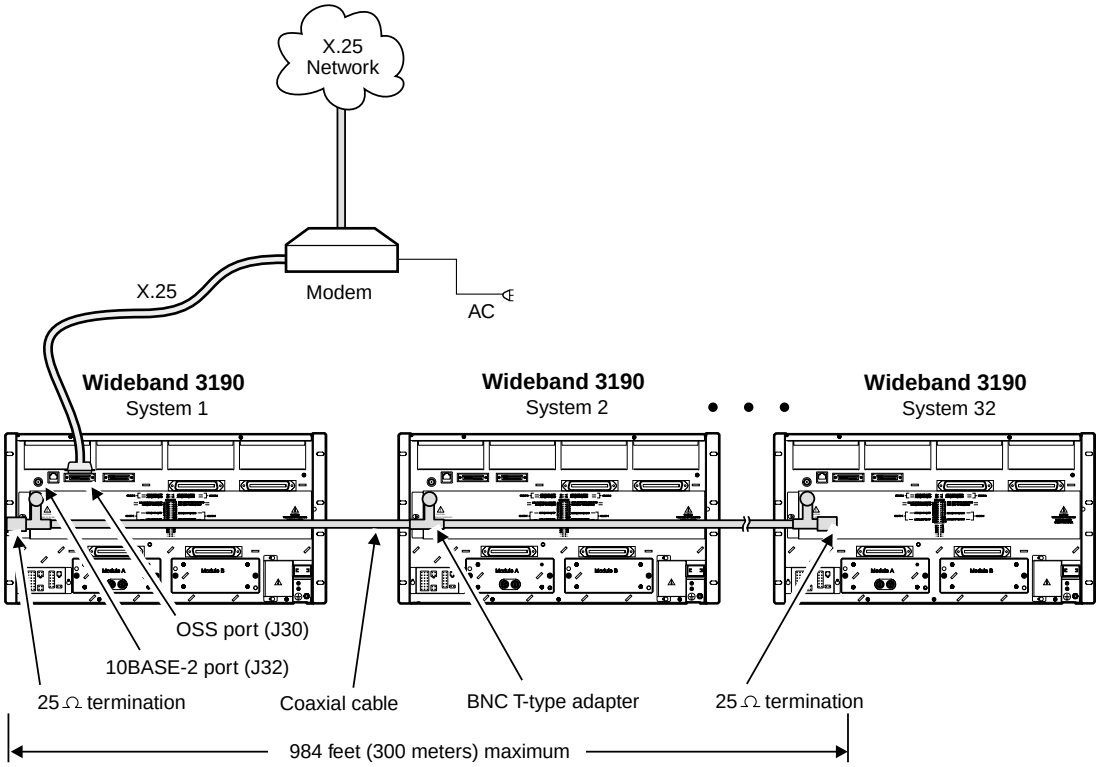

Figure 18. *Multishelf 10BASE-2 Configuration*

Step	Procedure	Installer Check ✓
1	Connect a standard Bayonet-locking connector (BNC) T-type adapter to the 10BASE-2 port (J32) on the backplane of each shelf in the series as shown in Figure 18.	❒
2	Connect one end of a coaxial cable to the BNC adapter on the back of the first shelf.	❒

Continued

Step	Procedure (Continued)	Installer Check ✓
3	Connect the other end of the cable to the BNC adapter on the back of the second shelf in the series.	❒
4	Connect each shelf to the next shelf in a series as described in Step 1 through Step 3.	❒
5	Install a standard 50 Ω termination on the unused side of the BNC adapter on the first and the last shelves in the series.	❒
6	Connect a terminal to the HMU-319 craft port or to the OSS port (J30) on any of the shelves in the network.	❒
7	Proceed to "Installing a Management Unit (HMU)" on page 30.	❒

Installer Signature ✍	Date

INSTALLING A MANAGEMENT UNIT (HMU)

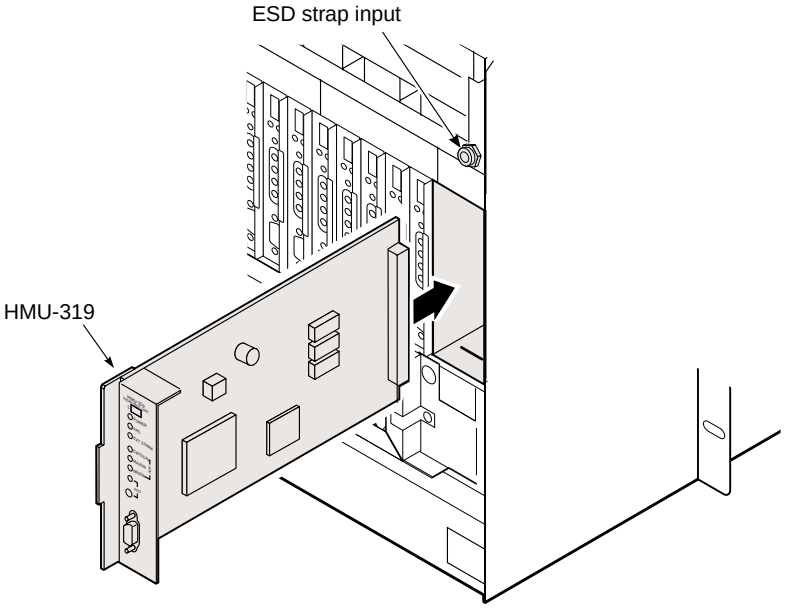

Figure 19. *Installing an HMU*

Step	Procedure	Installer Check ✓
	Whenever installing or removing units from the HMS-358 chassis, be sure to wear an antistatic wrist strap and connect it to the ESD strap input.	
1	Unscrew the two hold-down lugs on each upper corner of the chassis front cover. The cover folds down.	❒
2	Hold the HMU-319 vertically with the front of the card toward you. Align the top and bottom edges of the HMU-319 with the guide rails in the HMU slot and slide the HMU-319 into the rightmost slot position on the chassis (labeled HMU). See Figure 19.	❒
3	Press the HMU-319 firmly into the connector at the back of the slot. When the pins on the HMU-319 connect to the pins on the shelf backplane, the HMU-319 powers up, the Power LED glows green, and the Fail LED and Critical LED briefly flash red.	❒
4	Proceed to "Configuring the Management Unit" on page 34.	❒

Installer Signature ✍	Date

CONNECTING A LOCAL MAINTENANCE TERMINAL

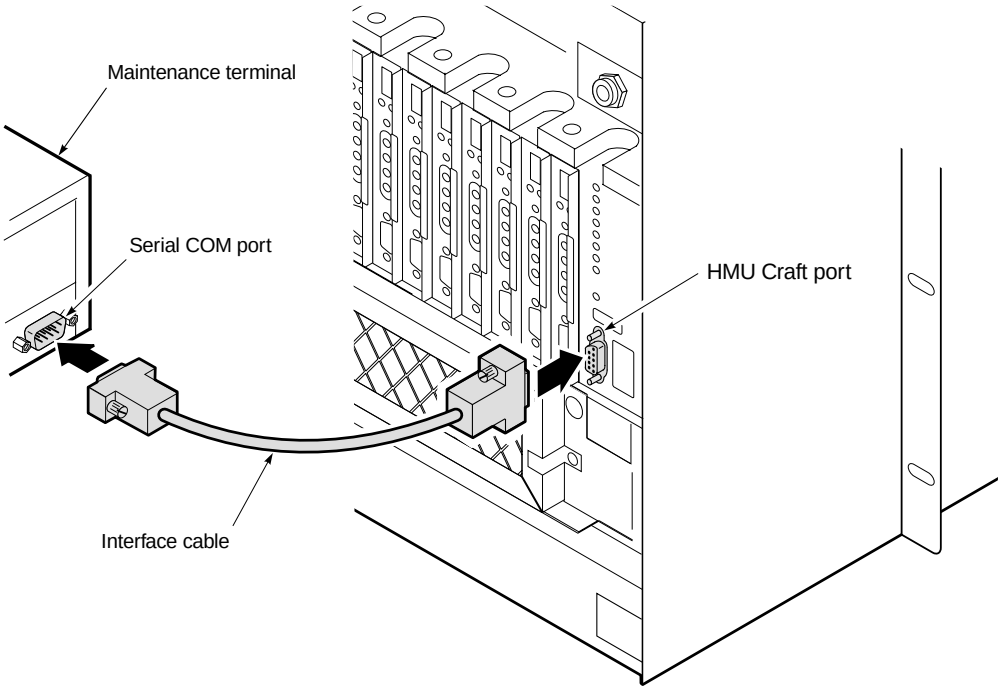

Figure 20. *Connecting a Maintenance Terminal to the HMU Craft Port*

Step	Procedure	Installer Check ✓
	The HMU DCE should be connected to the DTE port of the local maintenance terminal. If the connection to the HMU requires a DTE-to-DTE or DCE-to-DCE interface, see the HMU technical practice for more information.	
1	Connect a standard 9-pin, terminal cable to the HMU front panel craft (DB-9) port or connect a 25-pin terminal cable to the OSS port on the shelf backplane. The craft port is configured as DCE. The OSS port is configured as DTE.	❒
2	Connect the other end of the terminal cable to the serial COM port on the maintenance terminal.	❒
3	Start a VT100 terminal emulation program, such as HyperTerminal or Procomm, on the PC.	❒
4	Configure the maintenance terminal as follows: • 9600 baud • No parity • 8 data bits • 1 stop bit	❒
5	Proceed to "Using the Terminal Access Option" on page 32.	❒

Installer Signature ✍	Date

USING THE TERMINAL ACCESS OPTION

You can use the Terminal Access Option (TAO) interface to access and manage all the components of the HMS-358, including the line units, multiplexers, shelf, and the associated doublers and remote units. Figure 21 shows the various logon procedures based on your system configuration.

For complete information on TL1, refer to *TL1 Command Set Reference*, catalog number LTPH-RG-1028-06.

At the time of this writing, all versions of software respond to at least one of the following procedures described in this guide.

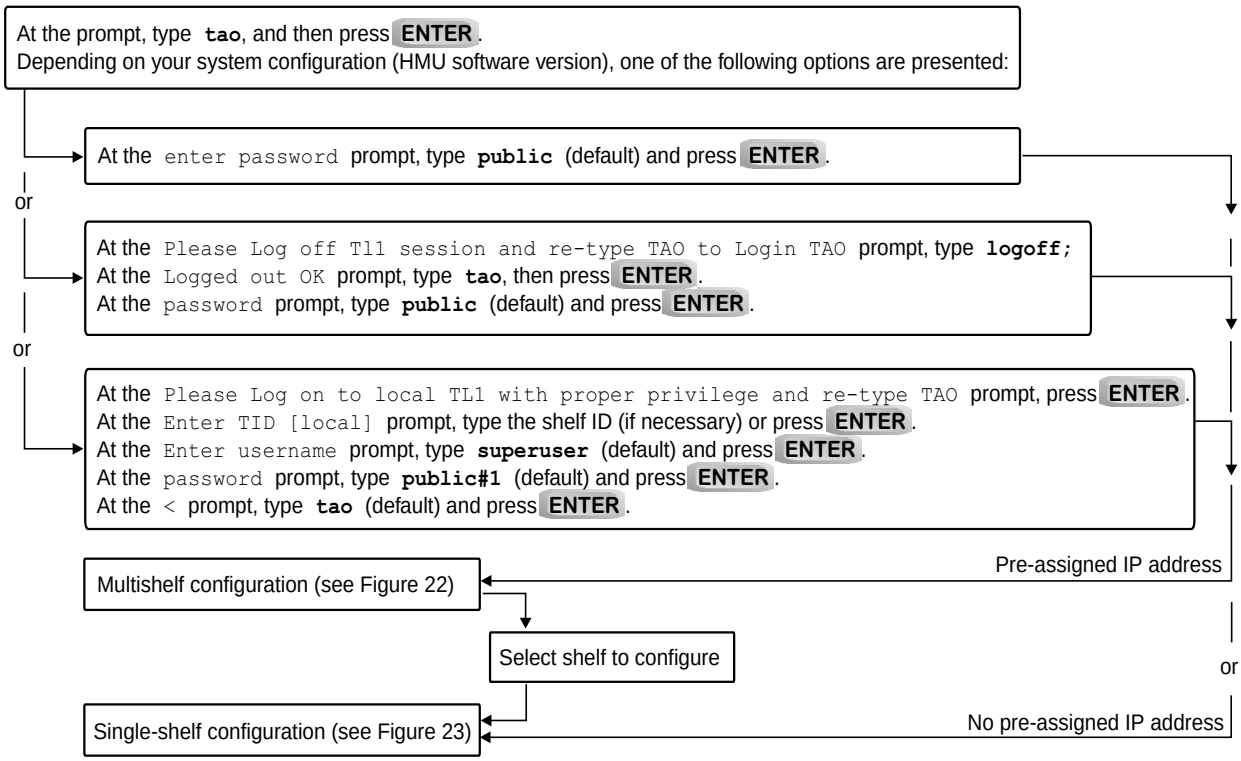

Figure 21. *Using the Terminal Access Option*

Installer Signature ✍	**Date**

Proceed to "Configuring the Management Unit" on page 34.

```
                          Terminal Access Option (TAO)

Network Status(Shelf # / Status / ID) Host ID: NEWCARD
-------------------------------------------------------------------------------
 1-Shelf name (1)                       17-
 2-Shelf name (2)                       18-
 3-Shelf name (3)                       19-
 4-                                     20-
 5-                                     21-
 6-                                     22-
 7-                                     23-
 8-                                     24-
 9-                                     25-
10-                                     26-
11-                                     27-
12-                                     28-
13-                                     29-
14-                                     30-
15-                                     31-
16-                                     32-
-------------------------------------------------------------10/30/00 15:33:27---
                      X - Exit TAO   <CR> - Refresh Screen
Enter shelf number or select option:
```

Figure 22. *Multishelf Configuration Sample*

```
                          Terminal Access Option (TAO)

Shelf Status for: NEWCARD  (slot# - Alarm Status)
-------------------------------------------------------------------------------
 1 [HLU] NORMAL     2                  3 [HLU] NORMAL     4 [HLU] NORMAL
 5 [ELU] NORMAL     6 [ELU] NORMAL     7 [ELU] NORMAL     8 [UNK] NORMAL
 9 [HLU] NORMAL    10 [HLU] NORMAL    11 [UNK] UNKNOWN   12 [HLU] NORMAL
13 [HLU] NORMAL    14 [HLU] NORMAL    15 [HLU] NORMAL    16 [UNK] UNKNOWN
17 [HLU] NORMAL    18                 19 [HLU] NORMAL    20 [HLU] NORMAL
21 [HLU] NORMAL    22                 23 [HLU] NORMAL    24*[HLU] NORMAL
25 [HLU] NORMAL    26 [HLU] NORMAL    27 [HLU] NORMAL    28 [HLU] NORMAL
* = Slot Alarms Disabled                                 Mux [358] NORMAL
-------------------------------------------------------------------------------
LOS Alarm Bus: NORMAL          FUSE Alarm Bus: NORMAL

PROTECTION: NORMAL             PWRFEEDALM: NORMAL
Critical Alarm: OFF            Major Alarm: ON             Minor Alarm: OFF
-------------------------------------------------------------10/30/00 15:34:26---

                        A - Alarm Management    M - Mux
                 N - Network Screen  P - HLU Protection Switching
             O - Shelf Options  <CR> - Refresh Screen   X - Exit TAO
Enter Line Unit Number or Select Option:
```

Figure 23. *Single-Shelf Configuration Sample*

CONFIGURING THE MANAGEMENT UNIT

Be sure to have an IP address ready. It is required during HMU configuration (for more information on IP addressing, refer "Network Specifications" on page 82).

Once the HMU has been installed in the shelf, you need to complete the following basic configuration steps:

- Setting the HMU date and time stamp for all alarms and reporting (page 35)
- Setting up a Shelf Identifier (SID) for each shelf for on-screen displays (page 35)
- Setting the Local IP address (page 36)
- Setting the Ethernet connection for HXU-357 multiplexers only (page 36)

If you forget your password, contact ADC customer service (see "Appendix C - Product Support" on page 94). For more information about passwords, refer to the HMU technical practice.

Step	Procedure	Installer Check ✓
	The following procedure assumes proper TAO login. **For proper login procedure, please refer to "Using the Terminal Access Option" on page 32.**	
1	From the Network Status screen (for multishelf configurations only), enter the number of the desired shelf (1 through 32), and then press **ENTER**.	❒
	The user-assigned chassis name must be used for proper shelf identification. **A descriptive naming plan must be developed and implemented.**	
2	From the Shelf Status screen, press **O** to select Shelf Options.	❒
3	Proceed to "Setting the HMU Date and Time (Option H)" on page 35.	❒

Installer Signature ✍	Date

TAO times out after a period of inactivity. Enter TAO **to return to the TAO screen.**

Setting the HMU Date and Time (Option H)

Setting the HMU date and time will globally configure these parameters for all HLU-319s in the system. The HMU-319 List 7A will also globally update the time and date settings for the HXUs in the chassis.

Step	Procedure	Installer Check ✓
1	Press H and then press ENTER to select Change HMU Date and Time.	❒
2	At the prompt, enter the current date using MM/DD/YY format, and then press ENTER.	❒
3	At the prompt, enter the current time using HH:MM 24-hour format, and then press ENTER.	❒
4	Press X to exit the screen and return to the Shelf Status menu.	❒
5	Proceed to "Setting the Shelf Identifier (Option D)" on page 35.	❒

Installer Signature ✍	Date

Setting the Shelf Identifier (Option D)

Step	Procedure	Installer Check ✓
1	From the Shelf Options menu, press D and then press ENTER to select Shelf ID.	❒
2	At the prompt, enter a text string of 32 alphanumeric characters or less to identify the shelf, and then press ENTER. The Shelf Identifier may be set to any value, but must be unique for each shelf in the network.	❒
3	Press X to exit the screen.	❒
4	Press Y to confirm, save the setting, and return to the Shelf Status menu.	❒
5	Proceed to "Setting the Local IP Address (Option A)" on page 36.	❒

Installer Signature ✍	Date

Setting the Local IP Address (Option A)

Step	Procedure	Installer Check ✓
1	From the Shelf Options menu, press **A**, then press **ENTER** to select Local IP Address for the HMU.	❒
2	At the prompt, enter the local IP address using the XXX.XXX.XXX.YYY format, where XXX and YYY are decimal numbers from 0 through 255. Do not select your own address. Your administrator should notify you of the unique address that has been assigned to the network. For additional help on IP addressing, see "Network Specifications" on page 82.	❒
3	Press **ENTER**.	❒
4	Press **X** to exit the screen.	❒
5	Press **Y** to confirm, save the setting, and reset the HMU. The program returns to the Network Status menu (if in a multishelf configuration) or Shelf Status menu (if in a single shelf).	❒
6	For HXU-357 multiplexers, proceed to "Setting the Ethernet Connection (Option G)" below; otherwise, proceed to "Installing Multiplexers" on page 37.	❒

Installer Signature ✍	Date

Setting the Ethernet Connection (Option G)

Step	Procedure	Installer Check ✓
1	From the Shelf Options menu, press **G** and then press **ENTER** to select Change Ethernet Connection.	❒
2	Press **1** and then press **ENTER** to select 10BASE-T.	❒
	For a single system installation that does not require a hubbed network connection, verify that the special 10BASE-T cable that comes with the module is connected from the module to the 10BASE-T (J34) connection on the back of the shelf. **If a hub is used, the 10BASE-T module can be routed directly to the hub using a Category-5 shielded connection.**	
3	Press **X** to exit the screen.	❒
4	Press **Y** to confirm, save the setting, and reset the HMU. The program returns to the Network Status menu (if in a multishelf configuration) or Shelf Status menu (if in a single shelf).	❒
5	Proceed to "Installing Multiplexers" on page 37.	❒

Installer Signature ✍	Date

INSTALLING MULTIPLEXERS

The HMS-358 can be configured with the following multiplexer cards:

- HXU-357—DS3 (see "Installing the HXU-357 Multiplexer Card" on page 38)
- HXU-358—DS3 (T1/E1) (see "Installing the HXU-358 Multiplexer Card" on page 43)
- HXU-359—STS-1 (see "Installing the HXU-359 Multiplexer Card" on page 50)
- HXU-369—OC-3 (see "Installing the HXU-369 Multiplexer Card" on page 59)

Depending on which of these multiplexers you are configuring, locate the proper installation procedures as detailed in "Selecting the Proper Installation Procedures".

SELECTING THE PROPER INSTALLATION PROCEDURES

This practice divides the installation procedure of each multiplexer into tabbed sections (see Figure 24). Follow the procedures listed only within this tabbed section of the practice.

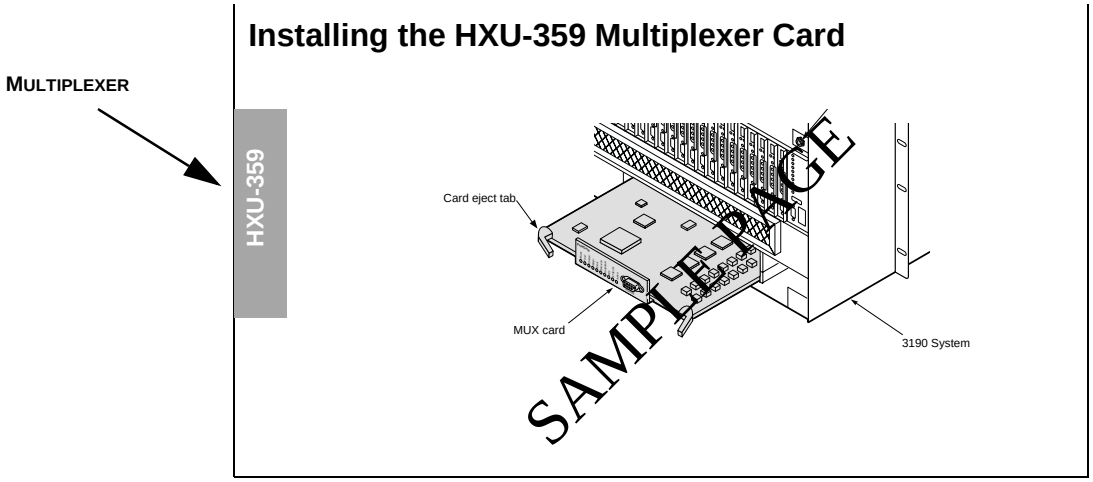

Figure 24. *Selecting the Proper Tabbed Section for Your Multiplexer*

INSTALLING THE HXU-357 MULTIPLEXER CARD

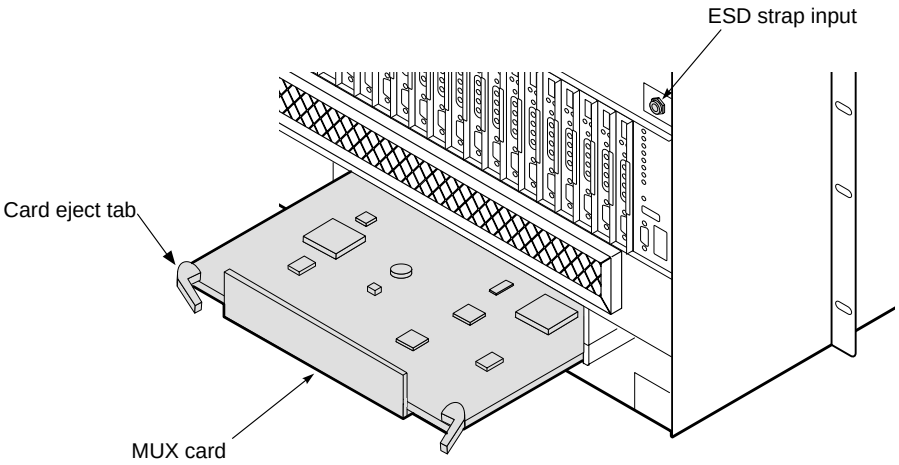

Figure 25. *Installing an HXU-357*

Step	Procedure	Installer Check ✓
	Whenever installing or removing units from the HMS-358 chassis, be sure to wear an antistatic wrist strap and connect it to the ESD strap input.	
1	If you have not already done so, unscrew the two hold-down lugs on each side of the chassis front cover. The cover folds down.	❒
2	Plug your ESD strap into the ESD input on the front of the chassis.	❒
3	Align the edges of the HXU-357 multiplexer card with the guide rails in the multiplexer tray.	❒
4	Grasping the card eject tabs, gently push the card into the bay.	❒
5	Firmly press in on the tabs until the card snaps into place.	❒
6	Repeat Step 3 through Step 5 for the other HXU-357 multiplexer.	❒
7	Proceed to "Setting Up the Communications Channel through the HXU-357" on page 39.	❒

Installer Signature ✍	Date

The LEDs flash momentarily when the multiplexer cards are installed. The PWR LED and Activity LED remain lit on the active multiplexer. The LEDs on the inactive multiplexer should be off, except for the power LED.

After initial installation, the HXU-357 multiplexer unit must be configured properly or continuous alarms will occur when the DS1 interface is placed in operation mode. During installation, the DS1 interface should be configured as Out-of-Service and Unequipped (Maintenance mode). The DS3 interface is configured as Out-of-Service.

These settings do not effect the transmitted payload, they only suppress the alarms and allow for modification.

Setting Up the Communications Channel through the HXU-357

The AUX port is not available to the user as a craft interface when any multiplexer is used in the shelf. HMU-319 List 7A automatically sets up the AUX port when the IP address is assigned to support IP network communication with the HXU-357.

Step	Procedure	Installer Check ✓
	The following procedure assumes proper TAO login. **For proper login procedure, please refer to "Using the Terminal Access Option" on page 32.**	
1	From the Network Status screen, type the number of the desired shelf ID (1 through 32), and then press **ENTER**.	❒
2	From the Shelf Status screen, press **O** to select Shelf Options.	❒
3	From the Shelf Options screen, press **E** to configure the Mux Type.	❒
4	Press **1** for HXU-357.	❒
5	Type the assigned IP address for the HXU-357. For more information on IP addressing, refer to "Network Specifications" on page 82.	❒
	When using an HXU-357, a 10BASE-T module (ADC part number 150-2233-01) is necessary for network management.	
6	Press **X** to exit the screen, then press **Y** to confirm and save the setting and return to the root menu of the Shelf Status screen.	❒
7	Proceed to "Setting Up Basic HXU-357 System Parameters in the System Administration Menu" on page 40.	❒

Installer Signature ✍	Date

HXU-357

Setting Up Basic HXU-357 System Parameters in the System Administration Menu

Step	Procedure	Installer Check ✓
1	From the Shelf Status screen, press M to log onto the HXU-357. For more information on navigating through the menu system, refer to the procedures detailed in "Setting Up the Communications Channel through the HXU-357" on page 39.	❒
2	At the prompt (`ID:`), type the password to access the HXU-357 Root Menu. The default password is `public`.	❒
3	Press 5 and then press ENTER to select System Administration from the root menu of the Shelf Status screen.	❒
4	Press 2 and then press ENTER to Change System Settings for the HXU-357, then select one of the following setting options by typing its number and typing the appropriate data. (The HMU-319 List 7A automatically sets the date and time parameters for the HXUs. If using an HMU-319 List 7, set the HXU time and date parameters here to match those of the HMU.) 1 Date 2 Time 3 System name 4 System location 5 Contact person 6 Write Community Name 7 Read Community Name	❒
5	Press CTRL + P to return to the System Administration menu.	❒
6	Press 3 and then press ENTER to select Change IP Address (Multiplexer IP).	❒
7	Type the address and mask information (selections 1 through 1 0) established for your particular addressing plan. Set the IP address of the HXU-357 Set the trap IP address to the same address as previously set on the HMU (refer to "Setting the Local IP Address (Option A)" on page 36) Complete the 10BASE-T connection from the HXU-357 to the hub resident on the HMU	❒
8	Press CTRL + R to return to the root menu of the Shelf Status screen.	❒
9	Proceed to "Configuring DS1 Services through the HXU-357" on page 41.	❒

Installer Signature ✍	Date

HXU-357

Configuring DS1 Services through the HXU-357

This section provides instructions for configuring a single line from the HXU Root Menu. After the DS1 line is configured, the line unit, any necessary doublers, and the HRU are installed as described in the sections which follow. The final step is to place the line in service to allow reporting and lockout further changes.

The DS1 line being configured must be set to Unequipped and Out-of-Service to allow configuration changes and prevent unwanted alarms. This is the default setting; it should not require adjustment. If you need to change the configuration of the DS1 line, follow these instructions.

Step	Procedure	Installer Check ✓
1	From the HXU-357 Root Menu, press 1 and then press ENTER to select the Configuration Management submenu. **For more information on navigating through the menu system, refer to the procedures detailed in "Setting Up Basic HXU-357 System Parameters in the System Administration Menu" on page 40.**	❒
2	Press 2 and then press ENTER to select Configure DS1 Interface.	❒
3	Press the channel number of the HLU to be configured.	❒
4	Press 1 and then press ENTER to select Set the DS1 Line Code. Press 2 and then press ENTER to select (B)8ZS line code. This is the default setting; it should not require adjustment. The HXU and HLU must be configured identically. **If an HCC-319 List 1 and List 2 Cut-through card is installed at this location, the LBO and line code must be selected to match the external line connected to the port.**	❒
5	Press 2 and then press ENTER to select Set DS1 Line Buildout. **If an HCC-319 List 1 and List 2 Cut-through card is installed at this location, the LBO and line code must be selected to match the external line connected to the port.**	❒
6	Select the number that corresponds to the appropriate line buildout value dictated by your particular system configuration. The default is 0-133 feet. It should not require adjustment.	❒
7	Repeat Step 2 through Step 6 for each service you are configuring.	❒
8	Press CTRL + R to return to the menu of the Shelf Status screen.	❒
9	Proceed to "Configuring the DS3 Transport through the HXU-357" on page 42.	❒

Installer Signature ✍	Date

HXU-357

Configuring the DS3 Transport through the HXU-357

The DS3 transport is configured in accordance with network requirements.

Step	Procedure	Installer Check ✓
1	From the Configuration Management submenu, press 1 and then press ENTER to select Configure DS3 Interface. For more information on navigating through the menu system, refer to the procedures detailed in "Setting Up the Communications Channel through the HXU-357" on page 39.	❒
2	Configure the DS3 transport according to CO requirements. Select each of the following setting options by typing its number, then choosing one of the parameters listed for that option. 1 Configure DS3 mode 2 Configure DS3 line buildout 3 Configure DS3 transmit timing 4 Configure DS3 BER threshold	❒
3	Press CTRL + R to return to the Configuration Management submenu.	❒
4	Proceed to "Placing the DS3 Transport In Service through the HXU-357" on page 42.	❒

Installer Signature ✍	Date

Placing the DS3 Transport In Service through the HXU-357

Step	Procedure	Installer Check ✓
1	From the Configuration Management submenu, press 6 and then press ENTER to select Service Mode. **For more information on navigating through the menu system, refer to the procedures detailed in "Setting Up Basic HXU-357 System Parameters in the System Administration Menu" on page 40.**	❒
2	Press 1 and then press ENTER to select DS3 Service Mode.	❒
3	Press 1 and then press ENTER to set to In-Service. The In-Service Mode prevents any changes to the DS3 configuration settings.	❒
4	Exit the Network Status screen by pressing ESC and then pressing ENTER.	❒
5	If you plan to install a fan assembly, proceed to "Installing a Fan Assembly (Optional)" on page 61; otherwise, proceed to "Installing a Line Unit (HLU)" on page 63.	❒

Installer Signature ✍	Date

HXU-357

INSTALLING THE HXU-358 MULTIPLEXER CARD

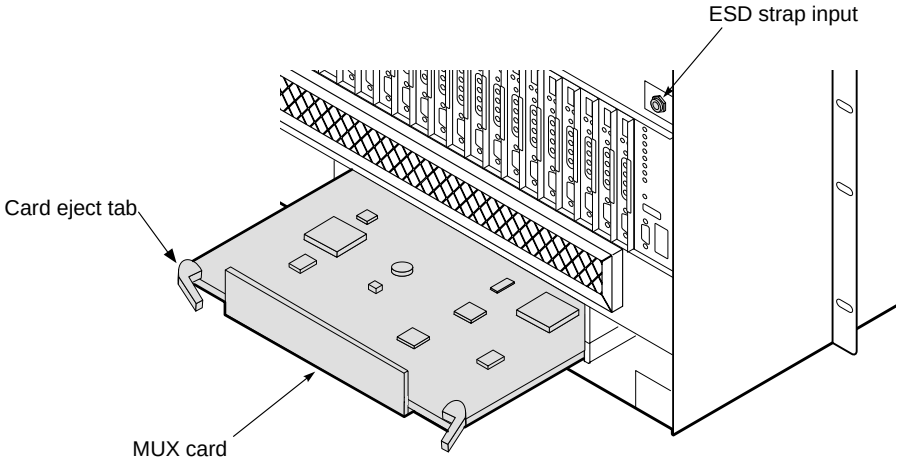

Figure 26. *Installing an HXU-358*

Step	Procedure	Installer Check ✓
	Whenever installing or removing units from the HMS-358 chassis, be sure to wear an antistatic wrist strap and connect it to the ESD strap input.	
1	If you have not already done so, unscrew the two hold-down lugs on each side of the chassis front cover. The cover folds down.	❒
2	Plug your ESD strap into the ESD input on the front of the chassis.	❒
3	Align the edges of the HXU-358 multiplexer card with the guide rails in the multiplexer tray.	❒
4	Grasping the card eject tabs, gently push the card into the bay.	❒
5	Firmly press in on the tabs until the card snaps into place.	❒
6	Repeat Step 3 through Step 5 for the other HXU-358 multiplexer.	❒
7	Proceed to "Setting Up Basic System Parameters Through the Config Menu" on page 44.	❒

Installer Signature ✍	Date

HXU-358

Setting Up Basic System Parameters Through the Config Menu

```
Main  Monitor  History  Config  Test  Inventory  Quit  Help
                        +-------------------+
                        | T1/E1 Ports       |
                        | DS3 Port          |
                        | Password          |
                        | Date and Time     |
                        | Card ID           |
                        | SW Download       |
                        | X-Connect         |
                        | Autologout Time   |
                        | Maintenance Port  |
                        | Circuit IDs       |
                        | Restore Defaults  |
                        +-------------------+

ID:  | Card 'A'              09/13/00 10:42:47              ALARMS: NONE
```

Figure 27. *Setting the Date and Time Through the HXU-358*

Step	Procedure	Installer Check ✓
	The following procedure assumes proper TAO login. **For proper login procedure, please refer to "Using the Terminal Access Option" on page 32.**	
	Use ←, ↑, →, ↓ to navigate through multiplexer menu options and settings.	
1	From the Network Status screen, type the number of the desired shelf ID (1 through 32), and then press **ENTER**.	❒
2	From the Shelf Status screen, press **O** to select Shelf Options.	❒
3	From the Shelf Options screen, press **E** to configure the Mux Type.	❒
4	Press **2** for HXU-358.	❒
5	Press **X** to exit the screen and return to the root menu of the Shelf Status screen.	❒
6	From the Shelf Options screen, select **M**.	❒
7	Select the **Config** menu and then press **ENTER**.	❒
8	Proceed to "Entering the Card ID (System Name) through the Config Menu" on page 45.	❒

Installer Signature ✍	Date

HXU-358

Entering the Card ID (System Name) through the Config Menu

```
Main  Monitor  History  Config  Test  Inventory  Quit  Help
                       +-------------------+
                       | T1/E1 Ports       |
                       | DS3 Port          |
                       | Password          |
                       | Date and Time     |
                       | Card ID           |
                       | +-------------------------------+
                       | | Enter Card ID   : ADC         |
                       | +-------------------------------+
                       | Maintenance Port  |
                       | Circuit IDs       |
                       | Restore Defaults  |
                       +-------------------+

ID:  | Card 'A'              09/13/00 10:42:47              ALARMS: NONE
```

Figure 28. *Setting the Card ID Through the HXU-358*

Step	Procedure	Installer Check ✓
	Use ←, ↑, →, ↓ to navigate through multiplexer menu options and settings.	
1	From the **Config** menu, select **Card ID** and then press ENTER. For more information on navigating through the menu system, refer to the procedures detailed in "Setting Up Basic System Parameters Through the Config Menu" on page 44.	❒
2	Type the system name after **Enter Card ID** and then press ENTER.	❒
3	Return to the **Config** menu by pressing ESC.	❒
4	Proceed to "Configuring DS1 Services through the Config Menu" on page 46.	❒

Installer Signature ✍	Date

HXU-358

Configuring DS1 Services through the Config Menu

```
 Main  Monitor  History  Config  Test  Inventory  Quit  Help
                        +-------------------+
                        | T1/E1 Ports       |
+-------------------------------------------------------------------------------+
|  Port   Srvc Mode    LBO  Code  T1/E1  | Port   Srvc Mode  LBO  Code  T1/E1   |
|    1     IN-SRVC     133  B8ZS   T1   |  15   OUT-OF-SRVC 133  B8ZS   T1     |
|    2     IN-SRVC     133  B8ZS   T1   |  16   OUT-OF-SRVC 133  B8ZS   T1     |
|    3     IN-SRVC     133  B8ZS   T1   |  17   OUT-OF-SRVC 133  B8ZS   T1     |
|    4     IN-SRVC     133  B8ZS   T1   |  18   OUT-OF-SRVC 133  B8ZS   T1     |
|    5   MAINTENANCE   133  B8ZS   T1   |  19   OUT-OF-SRVC 133  B8ZS   T1     |
|    6   MAINTENANCE   133  B8ZS   T1   |  20   OUT-OF-SRVC 133  B8ZS   T1     |
|    7   MAINTENANCE   133  B8ZS   T1   |  21   OUT-OF-SRVC 133  B8ZS   T1     |
|    8   MAINTENANCE   133  B8ZS   T1   |  22   OUT-OF-SRVC 133  B8ZS   T1     |
|    9    MEM-ADMIN    266  B8ZS   T1   |  23   OUT-OF-SRVC 133  B8ZS   T1     |
|   10    MEM-ADMIN    399  B8ZS   T1   |  24   OUT-OF-SRVC 133  B8ZS   T1     |
|   11    MEM-ADMIN    533  B8ZS   T1   |  25   OUT-OF-SRVC 133  B8ZS   T1     |
|   12    MEM-ADMIN    655  B8ZS   T1   |  26   OUT-OF-SRVC 133  B8ZS   T1     |
|   13   OUT-OF-SRVC   133  B8ZS   T1   |  27   OUT-OF-SRVC 133  B8ZS   T1     |
|   14   OUT-OF-SRVC   133  B8ZS   T1   |  28   OUT-OF-SRVC 133  B8ZS   T1     |
+-------------------------------------------------------------------------------+

    Use <Spacebar> to cycle through option settings and <Enter> to activate

ID:  | Card 'A'                 09/13/00 10:42:47                ALARMS: NONE
```

Figure 29. *Setting the T1/E1 Ports Through the HXU-358*

Step	Procedure	Installer Check ✓
	Use ←, ↑, →, ↓ to navigate through multiplexer menu options and settings.	
1	From the **Config** menu, select **E1/T1 Ports** and then press ENTER. For more information on navigating through the menu system, refer to the procedures detailed in "Setting Up Basic System Parameters Through the Config Menu" on page 44.	❒
2	To configure any of the 28 ports, select the port and change its **Srvc Mode** to MEM-ADMIN by pressing the SPACEBAR, and then press ENTER.	❒
3	Configure the following options: • Type of service **T1** or **E1** (T1 default) • Line code for T1 (**Code**) – AMI – B8ZS (default) • Line code for E1 (**Code**) – HDB3 • Line buildout (**LBO**) options for the channel [133 (default), 266, 399, 533, or 655 feet]. Pertains to T1 only, not applicable for E1.	❒

Continued

HXU-358

Step	Procedure (Continued)	Installer Check ✓
	In the HMS-358 system, these settings must match the HLU settings (not the default settings). **If an HCC-319 List 1 and List 2 Cut-through card is used, these settings should match those of the external line connected to the port.**	
4	Repeat Steps 1 and 3 for each service you are configuring.	❒
5	Proceed to "Configuring the DS3 Transport through the Config Menu" on page 48.	❒

Installer Signature ✍	Date

HXU-358

Configuring the DS3 Transport through the Config Menu

```
 Main  Monitor  History  Config  Test  Inventory  Quit  Help
                        +-------------------+
                        | T1/E1 Ports       |
                        | DS3 Port          |
       +-------------------------------------------------------+
       | Service Mode(OUT OF SERVICE,IN SERVICE..): MEMORY ADMIN |
       | Protection Mode (PROTECTED,UNPROTECTED)  : PROTECTED    |
       | DS3 Mode (M13,C-BIT)                     : M13          |
       | Line Buildout (100FT,450FT)              : 100FT        |
       | Transmit Timing (LOCAL,LOOP)             : LOCAL        |
       | BER Threshold (E-03,E-06,E-09)           : E-03         |
       | RAI upon DS1 Loopback (DISABLED,ENABLED) : DISABLED     |
       +-------------------------------------------------------+
                        | Restore Defaults  |
                        +-------------------+

Use <Spacebar> to cycle through option settings and <Enter> to activate

ID:  | Card 'A'              09/13/00 10:42:47              ALARMS: NONE
```

Figure 30. *Setting the DS3 Port Through the HXU-358*

Step	Procedure	Installer Check ✓
1	From the **Config** menu, select **DS3 Port** and then press ENTER. For more information on navigating through the menu system, refer to the procedures detailed in "Setting Up Basic System Parameters Through the Config Menu" on page 44.	❒
2	Select **Service Mode**, press the SPACEBAR to select MEM-ADMIN, then press ENTER. No configuration changes can be made unless the Service Mode is configured as MEM-ADMIN.	❒
3	If this is a dual multiplexer application, **Protection Mode** is automatically set to PROTECTED.	❒
4	In most applications, **Operating Mode** should be set to M13.	❒
5	Set **Line Buildout** to 100FT (default) or 450FT.	❒
	In most applications Transmit Timing should be set to LOCAL.	
6	Set the **BER Threshold** to E-03 (default), E-06, or E-09. (This sets the BER point at which an alarm is declared and protection switching occurs.)	❒
7	Set the **RAI upon DS1 Loopback** to DISABLED (default) or ENABLED.	❒
8	When you are finished configuring the DS3 Port, select **Service Mode** and change it to IN SERVICE.	❒
9	Exit the Shelf Options screen.	❒

Continued

HXU-358

Step	Procedure (Continued)	Installer Check ✓
10	Exit the Network Status screen by pressing ESC then ENTER.	❒
11	If you plan to install a fan assembly, proceed to "Installing a Fan Assembly (Optional)" on page 61; otherwise, proceed to "Installing a Line Unit (HLU)" on page 63.	❒

Installer Signature ✍	Date

HXU-358

INSTALLING THE HXU-359 MULTIPLEXER CARD

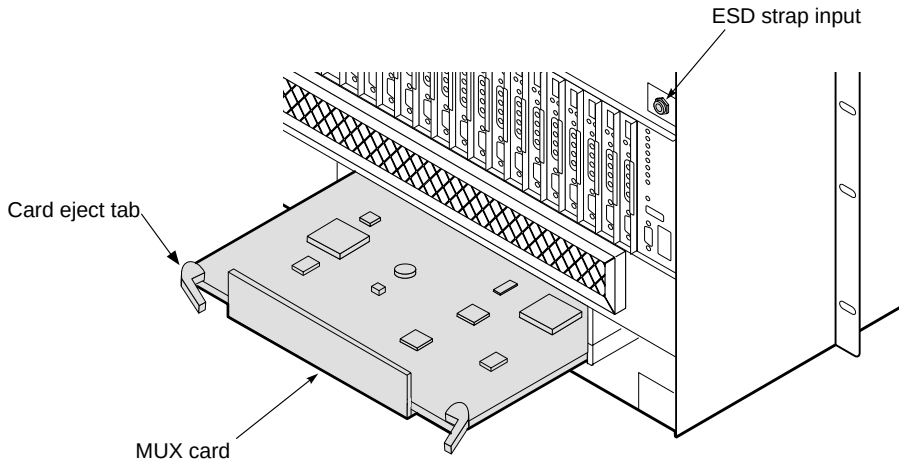

Figure 31. *Installing an HXU-359*

Step	Procedure	Installer Check ✓
	Whenever installing or removing units from the HMS-358 chassis, be sure to wear an antistatic wrist strap and connect it to the ESD strap input.	
1	Unscrew the two hold-down lugs on each side of the chassis front cover. The cover folds down.	❒
2	Plug your ESD strap into the ESD input on the front of the chassis.	❒
3	Set switches on the SW2 switch block for activation of the HXU or HMU craft port. (The SW2 switch block is located on the circuit board behind the front panel.) Confirm that switch 5 default configuration is Off (HMU craft port activated) and switch 3 default configuration is Off (OSTS protocol is activated for the backplane).	❒
4	Align the edges of the HXU-359 with the slot guides in the multiplexer tray.	❒
5	Grasping the card eject tabs, gently push the card into the bay.	❒
6	Firmly press in on the tabs until the card snaps into place.The LEDs flash momentarily. The Power LED and Active LED on the active multiplexer remain illuminated. The LEDs on the inactive (standby) multiplexer should be off, except for the Power LED.	❒
7	Repeat Step 3 through 6 for the other HXU-359.	❒
8	Proceed to "Setting Up Basic System Parameters through the Config Menu" on page 51.	❒

Installer Signature ✍	Date

HXU-359

Setting Up Basic System Parameters through the Config Menu

```
Main  Monitor  History  Config  Test  Inventory  Quit  Help
                       +-------------------+
                       | Services          |
                       | Transport         |
                       | Clock             |
                       | APS               |
                       | System            |
                       | +---------------------------------+
                         | Date and Time                   |
                         | Card ID                         |
                         | Password                        |
                         | Software                        |
                         | Set to factory defaults         |
                         +---------------------------------+

ID:  | Card 'A'              09/13/00 10:42:47              ALARMS: NONE
```

Figure 32. *Setting the Date and Time Through the HXU-359*

Step	Procedure	Installer Check ✓
	The following procedure assumes proper TAO login. For proper login procedure, please refer to "Using the Terminal Access Option" on page 32.	
1	From the Network Status screen, type the number of the desired shelf ID (1 through 32), and then press **ENTER**.	❒
2	From the Shelf Status screen, press **O** to select Shelf Options.	❒
3	From the Shelf Options screen, press **E** to configure the Mux Type.	❒
4	Press **3** for HXU-359.	❒
5	Press **X** to exit the screen, then press **Y** to confirm and save the setting and return to the root menu of the Shelf Status screen.	❒
6	From the Shelf Status screen, select **M**.	❒
7	Select the **Config** menu, choose **System**, and then press **ENTER**.	❒
8	Proceed to "Entering the Card ID (System Name) through the Config Menu" on page 45.	❒

Installer Signature ✍	Date

HXU-359

Entering the Card ID (System Name) through the Config Menu

```
Main  Monitor  History  Config  Test  Inventory  Quit  Help

                    +----------Set Card ID------------+
                    |                                 |
                    | +-----------------------------+ |
                    | |                             | |
                    | ID:                           | |
                    | |                             | |
                    | +-----------------------------+ |
                    |                                 |
                    +---------------------------------+

ID:  | Card 'A'              09/13/00 10:42:47              ALARMS: NONE
```

Figure 33. *Setting the Card ID Through the HXU-359*

Step	Procedure	Installer Check ✓
1	From the **System** submenu, choose **Card ID**, and then press **ENTER**. **Card ID is used to identify multiplexer to STS-1 network connection.**	❒
2	Type a name for the card (network element name), and then press **ENTER**. The name typed is attached to both cards in a protected system. Card A is the multiplexer in slot A; Card B is the multiplexer in slot B.	❒
3	Exit the **Config** menu by pressing **ESC**.	❒
4	Proceed to "Setting the System Clock Synchronization through the Config Menu" on page 53.	❒

Installer Signature ✍	Date

HXU-359

Setting the System Clock Synchronization through the Config Menu

```
Main  Monitor  History  Config  Test  Inventory  Quit  Help


  +--------------------------Clock Configuration----------------------+
  |                                                                    |
  |         +-----------------------------------------------+          |
  |         |  Primary Reference           :     Bits A      |          |
  |         |                                    DS1 speed   |          |
  |         |  Secondary Reference         :     Bits A      |          |
  |         |                                    DS1 speed   |          |
  |         |  Timing Reference Switching  :     Revertive   |          |
  |         |  Force     :                       Normal      |          |
  |         +-----------------------------------------------+          |
  |                                                                    |
  | (TAB) next field (Spacebar) next value (ENTER) activate (ESC) quit |
  |                                                                    |
  +--------------------------------------------------------------------+


ID:  | Card 'A'              09/13/00 10:42:47              ALARMS: NONE
```

Figure 34. *Setting the Clock Configuration Through the HXU-359*

Step	Procedure	Installer Check ✓
1	From the **Config** submenu, choose **Clock**, and then press **ENTER**. For more information on navigating through the menu system, refer to the procedures detailed in "Setting Up Basic System Parameters through the Config Menu" on page 51.	❒
2	Press the **SPACEBAR** to select the next value, and press **TAB** to select next field. Configure the following options: • Bits A DS1 speed (default) or E1 speed • Bits B DS1 speed (default) or E1 speed • Internal • Transport • Service #1 ~ 28	❒

Continued

HXU-359

Step	Procedure (Continued)	Installer Check ✓
3	Set the **Secondary Reference** and press TAB to select speed.for synchronization. Configure the following options: • Bits A DS1 speed (default) or E1 speed • Bits B DS1 speed (default) or E1 speed • Internal • Transport • Service #1 ~ 28	❒
4	Set the **Timing Reference Switching.** Setting the timing reference to **Revertive** causes the clock to revert to the primary clock when it is valid. Configure the following options: • Revertive (default) • Non-revertive	❒
5	To manually force the clock synchronization mode, set **Force** to the desired mode. Configure the following options: • Normal (default) • Primary • Secondary • Internal • Hold-over	❒
6	Return to the **Config** menu by pressing ESC.	❒
7	Proceed to "Configuring DS1 Services through the Config Menu" on page 55.	❒

Installer Signature ✍	Date

A service or transport must be configured as In-Service (IS) prior to being selected as the synchronization source.

HXU-359

Configuring DS1 Services through the Config Menu

```
Main  Monitor  History  Config  Test  Inventory  Quit  Help
  +-------------------------Services Configuration----------------------+
  |            #    Mode   Type  Code    LBO    Lpbk  VTG  VTS           |
  |            01   OOS-A  DS1   B8ZS   131ft   NONE   0    0            |
  |            02   OOS-A  DS1   B8ZS   131ft   NONE   1    2            |
  |            03   OOS-A  DS1   B8ZS   131ft   NONE   1    3            |
  |            04   OOS-A  DS1   B8ZS   131ft   NONE   1    4            |
  |            05   OOS-A  DS1   B8ZS   131ft   NONE   2    1            |
  |            06   OOS-A  DS1   B8ZS   131ft   NONE   2    2            |
  |            07   OOS-A  DS1   B8ZS   131ft   NONE   2    3            |
  |            08   OOS-A  DS1   B8ZS   131ft   NONE   2    4            |
  |            09   OOS-A  DS1   B8ZS   131ft   NONE   3    1            |
  |            10   OOS-A  DS1   B8ZS   131ft   NONE   3    2            |
  |            11   OOS-A  DS1   B8ZS   131ft   NONE   3    3            |
  |            12   OOS-A  DS1   B8ZS   131ft   NONE   3    4            |
  |            13   OOS-A  DS1   B8ZS   131ft   NONE   4    1            |
  |            14   OOS-A  DS1   B8ZS   131ft   NONE   4    2            |
  | (N)ext page (P)rev page (T)op (B)ottom (ENTER) edit srv. (ESC) quit  |
  |           +---------------------------------------------+            |
  |           | 01  OOS-A  DS1   B8ZS   131ft   NONE   0    0 |          |
  |           +---------------------------------------------+            |
  | (TAB) next field (Spacebar) next value (ENTER) activate (ESC) quit  |
  +----------------------------------------------------------------------+
ID:  | Card 'A'                09/13/00 10:42:47              ALARMS: NONE
```

Figure 35. *Setting Up DS1 Services Through the HXU-359*

Step	Procedure	Installer Check ✓
1	From the **Config** submenu, choose **Services**, and then press ENTER. For more information on navigating through the menu system, refer to the procedures detailed in "Setting Up Basic System Parameters through the Config Menu" on page 51.	❒
2	Select a DS1 service port, then press ENTER. The configuration bar at the bottom of the screen should show your selection.	❒
3	If the selected DS1 port is configured as **IS**, **OFF**, or **OSS-M** (Mode field): • Press the TAB key to select the Mode field. • Press the SPACEBAR to select OOS-A (default). Press ENTER.	❒
4	Choose the type of service (DS1). **Some units do not support both types of services.**	❒
5	Choose the type of line code [B8ZS (default) or AMI].	❒
6	Choose the line buildout for the DS1 port [131 (default), 262, 393, 524, or 655 ft.].	❒

Continued

HXU-359

Step	Procedure (Continued)	Installer Check ✓
	Line load, line type, and line buildout must match the HCU card in use. These settings should be set to the default values. **If an HCC-319 List 1 and List 2 Cut-through card is used, these settings should match those of the external line connected to the port.**	
7	Select the **Virtual Tributary Group (VTG) 1 through 7** and the **Virtual Tributary Slot (VTS) 1 through 4**. Only available combinations are presented for selection.	❒
8	When finished configuring the port, reset the port to **IS** to place the line unit in service, then press **ENTER**.	❒
9	Return to the **Config** menu by pressing **ESC**.	❒
10	Proceed to "Configuring the STS-1 Transport through the Config Menu" on page 57.	❒

Installer Signature ✍	Date

Do not configure a service as OOS-M or OOS-A when it is selected as a clock synchronization source.

HXU-359

Configuring the STS-1 Transport through the Config Menu

```
Main  Monitor  History  Config  Test  Inventory  Quit  Help

  +-------------------------Transport Configuration-----------------------+
  |                                                                        |
  |      +-------------------------------------------------------+        |
  |      |     Primary State  :       IS                         |        |
  |      |                                                       |        |
  |      |     RX Path Trace  :       abcdefghijklmnopqrstuvwxyz |        |
  |      |                                                       |        |
  |      |     TX Path Trace  :       abcdefghijklmnopqrstuvwxyz |        |
  |      |                                                       |        |
  |      |     DCC  :                 ON                         |        |
  |      |                                                       |        |
  |      |     Loopback       :       NONE                       |        |
  |      |                                                       |        |
  |      |     Line Buildout  :       <250 ft.                   |        |
  |      +-------------------------------------------------------+        |
  |                                                                        |
  |  (TAB) next field (Spacebar) next value (ENTER) activate (ESC) quit    |
  |                                                                        |
  +------------------------------------------------------------------------+

ID:  | Card 'A'                09/13/00 10:42:47                ALARMS: NONE
```

Figure 36. *Setting Up the STS-1 Transport Through the HXU-359*

Step	Procedure	Installer Check ✓
1	From the **Config** submenu, choose **Transport**, and then press ENTER. For more information on navigating through the menu system, refer to the procedures detailed in "Setting Up Basic System Parameters through the Config Menu" on page 51.	❒
2	Set Primary State to **OOS-A** using the SPACEBAR, and then press ENTER. **Do not configure the transport as OOS-M or OOS-A when it is selected as a clock synchronization source.**	❒
3	Select **Transport** and then press ENTER.	❒
4	Type the Tx Path Trace transmit path trace string. String can be no longer than 40 characters.	❒
5	Set the Data Communications Channel (DCC) to **ON**.	❒
6	Set Loopback to **NONE** and then press ENTER.	❒
7	Set Line Buildout option to either >250 ft. or <250 ft. and then press ENTER.	❒
8	Set Primary State to **IS** and press ENTER.	❒

Continued

HXU-359

Step	Procedure (Continued)	Installer Check ✓
9	Exit the Transport Configuration screen by pressing ESC.	❒
10	If you plan to install a fan assembly, proceed to "Installing a Fan Assembly (Optional)" on page 61; otherwise, proceed to "Installing a Line Unit (HLU)" on page 63.	❒

Installer Signature ✍	Date

HXU-359

INSTALLING THE HXU-369 MULTIPLEXER CARD

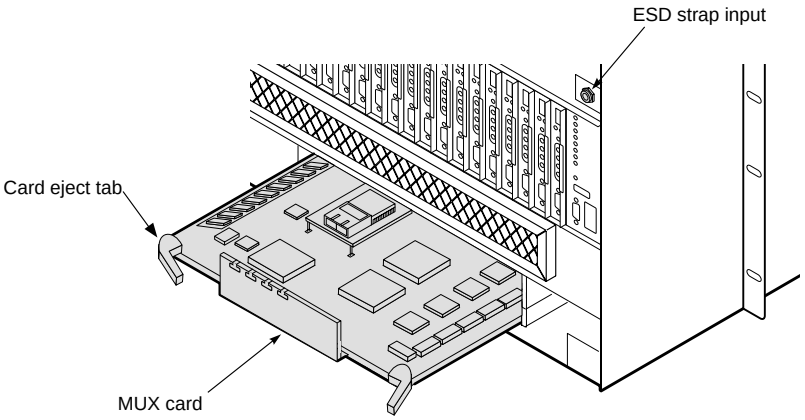

Figure 37. *Installing an HXU-369*

If you have already installed the HXU-369 multiplexer at this point as outlined in "Installing Interface Cables—OC-3 (Dual Subtended STS-1 Multiplexers)" on page 15, proceed to "Installing a Fan Assembly (Optional)" on page 61 and plan to install a fan; otherwise, proceed to "Installing a Line Unit (HLU)" on page 63.

If you are installing an HXU-369 in a Wideband System 3190 that has an legacy multiplexer (HXU-357, HXU-358, or HXU-359), contact Customer Service.

Step	Procedure	Installer Check ✓
	Whenever installing or removing units from the HMS-358 chassis, be sure to wear an antistatic wrist strap and connect it to the ESD strap input.	
1	If you have not already done so, unscrew the two hold-down lugs on each side of the chassis front cover. The cover folds down.	❒
2	Plug your ESD strap into the ESD input on the front of the chassis.	❒
3	Align the edges of the HXU-369 with the slot guides in the multiplexer tray.	❒
4	Grasping the card eject tabs, gently push the card halfway into the bay. • Insert the fiber-optic cable connectors into transmit (TX) and receive (RX) receptacles on the piggybacked card. • Route the cables through the inverted T slots in the HXU-369 front panel. The inverted T slots provide a method of maintaining the correct cable bend ratio. • The cables are then routed to the left of the multiplexer tray and exit the tray via the large access hole on the left side of the tray.	❒
5	Grasping the card eject tabs, gently push the card the remainder of the way into the bay.	❒

Continued

Step	Procedure (Continued)	Installer Check ✓
6	Firmly press in on the tabs until the card snaps into place. The LEDs flash momentarily. The Power LED and Active LED on the active multiplexer remain illuminated. The LEDs on the inactive (standby) multiplexer should be off, except for the Power LED.	❒
7	Repeat Step 3 through 6 for the other HXU-369. To set the internal clock as the synchronization source Set clk int and then type at the TL1 command line prompt.	❒
8	If you plan to install a fan assembly, proceed to "Installing a Fan Assembly (Optional)" on page 61; otherwise, proceed to "Installing a Line Unit (HLU)" on page 63.	❒

Installer Signature ✍	Date

For more information about HXU-369 installation procedures, refer to the installation guide 150-369-100-xx.

Once the fan assembly is installed, it must be placed under HMU management.

INSTALLING A FAN ASSEMBLY (OPTIONAL)

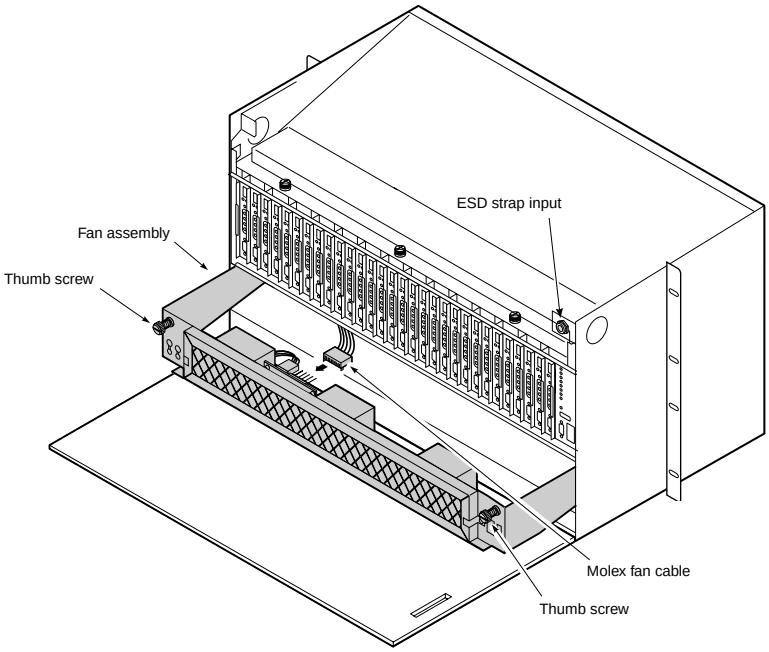

Figure 38. *Installing the Fan Assembly (Cover Down)*

The HFA-357 fan assembly is installed from the front of the chassis, above the multiplexer tray.

The fans begin operating as soon as the cable is connected. Avoid contact with the fan blades and do not allow any foreign matter to obstruct the operation of the fan blades.

Do not install fans without connecting the cable. A fan assembly that is not operational will block air flow and cause overheating.

Step	Procedure	Installer Check ✓
	Whenever installing or removing units from the HMS-358 chassis, be sure to wear an antistatic wrist strap and connect it to the ESD strap input above the HMU slot on the inside of the chassis.	
1	Unscrew the two hold-down lugs on each side of the chassis front cover. The cover folds down.	❒
2	Plug your ESD wrist strap into the ESD input above the HMU slot.	❒
3	Locate the keyed Molex fan cable (connected to the inside of the chassis) and attach it to the circuit board on the fan assembly. The fans begin operating as soon as the cable is connected.	❒
4	Slide the fan assembly into the opening above the multiplexer tray.	❒
5	Secure the fan assembly in place with the hold-down lugs (one at each corner of the assembly).	❒
6	Proceed to "Placing the Fan Under HMU Management" on page 62.	❒

Installer Signature ✍	Date

Placing the Fan Under HMU Management

Step	Procedure	Installer Check ✓
	The following procedure assumes proper TAO login. **For proper login procedure, please refer to "Using the Terminal Access Option" on page 32.**	
1	From the Network Status screen (for multishelf configurations), type the number of the desired shelf (1 through 32), and then press **ENTER**.	❒
2	From the Shelf Status screen, press **O** to select Shelf Options.	❒
3	From the Shelf Options screen, press **K** to select Fan Monitoring.	❒
4	Press **2** to turn on fan monitoring.	❒
5	Press **X** to exit the screen, then press **Y** to confirm and save the setting.	❒
6	Verify that the fans are running properly and that no alarms are indicated on the Shelf Status screen. Fan alarms and failures are now monitored by the HMU.	❒
7	Proceed to "Installing a Line Unit (HLU)" on page 63.	❒

The fan assembly filter should be changed when dirty—normally every six to nine months.

1. **To remove the filter, slightly loosen the bracket screws that secure the two filter brackets.**
2. **Move the brackets aside and slide out the filter.**
3. **Insert the new filter, adjust the brackets and tighten the bracket screws.**

Installer Signature ✍	Date

INSTALLING A LINE UNIT (HLU)

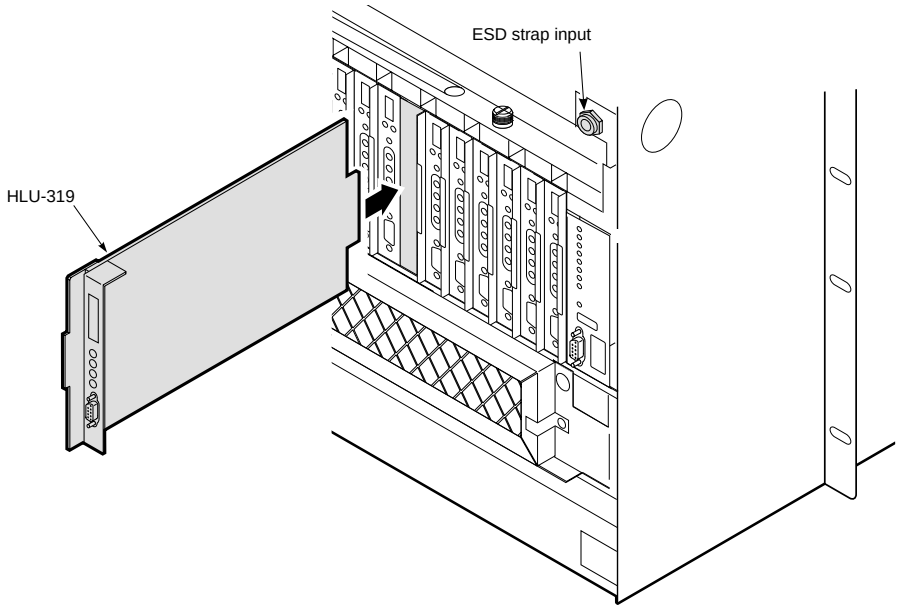

Figure 39. *Installing a Line Unit into the Wideband 3190 Chassis*

Step	Procedure	Installer Check ✓
	Whenever installing or removing units from the HMS-358 chassis, be sure to wear an antistatic wrist strap and connect it to the ESD strap input.	
1	If you have not already done so, open the chassis front cover by unscrewing the two hold-down lugs on the upper corners. The cover folds down.	❐
2	Be sure to plug your ESD wrist strap into the ESD above the HMU slot.	❐
3	Slide the line unit into the card guides for the desired slot, then push the unit in until it touches the backplane card-edge connector and the retaining latch on the front panel opens (Figure 39).	❐
4	Place your thumbs on the line unit front panel and push the line unit into the card-edge connector until it is entirely within the card guides and the retaining latch closes. This indicates that the card is properly seated.	❐
	Do not enable alarms at this point in the procedure. You will not fully configure the HLU until the line units are placed into service. This procedure is detailed in "Placing the Line in Service" on page 66.	
5	If you plan to install remote units, proceed to "Installing a Remote Unit (HRU)" on page 64, otherwise; proceed to "Setting Up Circuit IDs" on page 65.	❐

Installer Signature ✍	Date

INSTALLING A REMOTE UNIT (HRU)

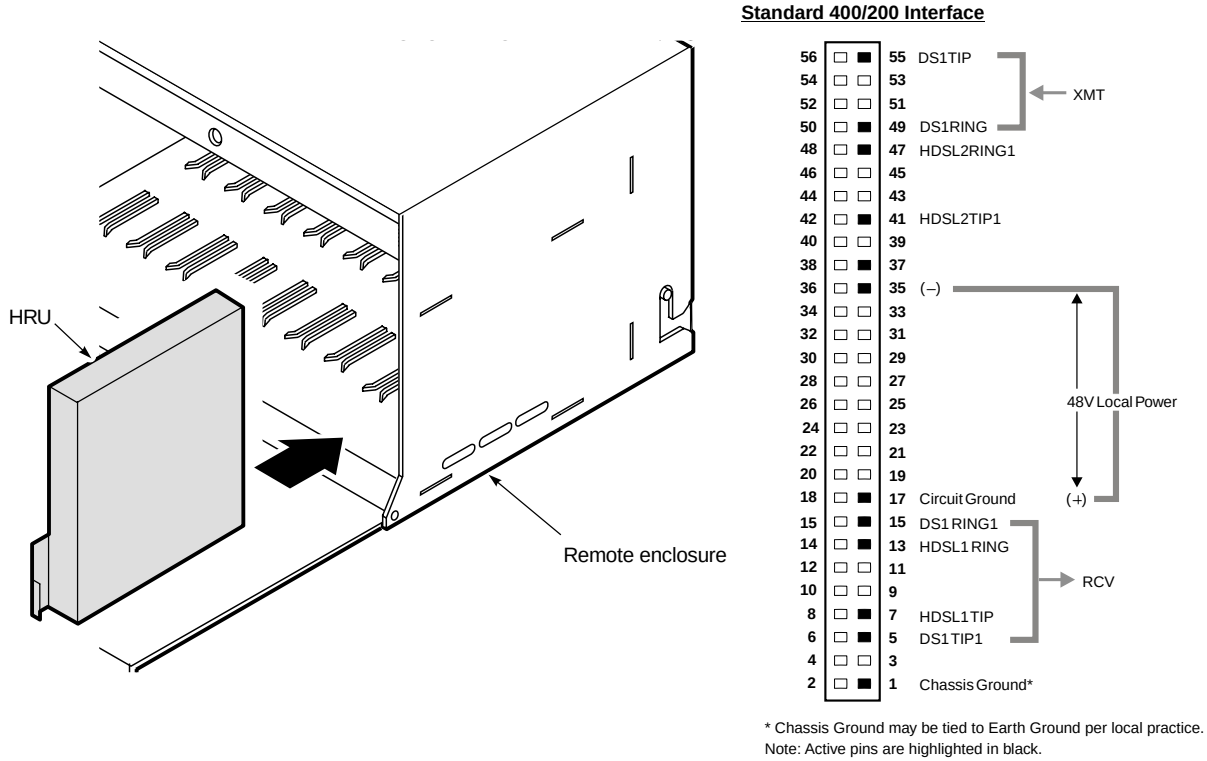

Figure 40. *Installing an HRU in a Remote Enclosure*

Step	Procedure	Installer Check ✓
	Whenever installing or removing units from a remote enclosure, be sure to wear an antistatic wrist strap and connect it to the ESD strap input.	
1	Open the remote enclosure cover.	❒
2	Plug your ESD wrist strap into the ESD above the HMU slot.	❒
3	Set the user options for status LEDs. Refer to the HRU technical practice for details. User options usually include setting the: • DS1 receive level • TLOS • Sealing current • Local or line power selection **Refer to the HRU pinout in Figure 40 if remote chassis is not pre-wired.**	❒

Continued

Step	Procedure (Continued)	Installer Check ✓
4	Slide the remote unit into the card guides for the desired slot, then push the unit into the enclosure until it is seated in the card-edge connector. The unit should snap into place, indicating that the unit is properly seated. The HRU should power up within 30 seconds.	❒
5	Proceed to "Setting Up Circuit IDs" on this page.	❒

Installer Signature ✍	Date

The craft port on an HRU can be accessed for configuration whether or not it is managed by an HMU. Refer to "Configuring the Management Unit" on page 34 and the HRU practice for more information about provisioning the HRU.

SETTING UP CIRCUIT IDS

Step	Procedure	Installer Check ✓
	The following procedure assumes proper TAO login. **For proper login procedure, please refer to "Using the Terminal Access Option" on page 32.**	
1	From the Shelf Status screen, type the number of the line unit, and then press ENTER.	❒
2	From the Maintenance Terminal Main menu, select H from the Main menu to display the line unit System Inventory screen.	❒
3	Press the corresponding letter of the unit of which you want to change the circuit ID.	❒
4	Type a text string of 32 alphanumeric characters or less to identify the unit and then press ENTER.	❒
5	Press E to exit the System Inventory screen, and then choose C to confirm. If more than 24 characters are typed, a warning beep is emitted and only the first 24 characters are accepted.	❒
6	If you would like to perform a loopback test of the line at this time, follow the instructions provided in the HRU technical practice. Loopback testing allows verification of the integrity of the HDSL channel to the HLU as well as the DS1 channel to the customer and the HLU DSX-1 interface. A loopback testing diagram is found on the inside front panel on the chassis as well as in "Troubleshooting and System Testing" on page 74.	❒
7	Repeat Step 1 through Step 5 for each line that you plan to activate.	❒
8	Press ESC to exit the Network Status screen.	❒
9	Proceed to "Placing the Line in Service" on page 66.	❒

Installer Signature ✍	Date

PLACING THE LINE IN SERVICE

After the line installation is complete, the line must be placed in service by:

- enabling the alarms on the HLU
- placing the DS1 interface in service at the HXU

Placing the HLU Under HMU Management

Step	Procedure	Installer Check ✓
	The following procedure assumes proper TAO login. For proper login procedure, please refer to "Using the Terminal Access Option" on page 32.	
1	From the Network Status screen, type the number of the desired shelf (1 through 32) and then press ENTER.	❒
2	From the Shelf Status screen, press A to select Alarm Management.	❒
3	Type the slot number of the line unit you want to enable.	❒
4	Press an appropriate Y or N response for the alarm setting you are changing.	❒
5	Proceed to "Placing the Line Unit in Service at the HXU" on page 67.	❒

Installer Signature ✍	Date

If an HLU card is hot-swapped while under HMU management, no setup is required. All configuration settings are automatically downloaded from the HMU.

If the HMU is managing the line unit, only the HMU maintenance terminal (ASCII terminal or PC running a terminal emulation program) can configure the line unit.

Removal of the HMU from the chassis enables the front panel craft port on the HLU.

When an HMU is replaced, the new HMU rebuilds its configuration database from the active line units.

Placing the Line Unit in Service at the HXU

The Wideband 3190 interfaces internally to the 28 lines at the common DSX-1 point. Once a line has been configured on the HLU, the DS1 interface at the HXU should be placed In-Service. Some alarm reporting will be lost if the line is not placed In-Service.

The procedure to place a line unit in service varies by the type of multiplexer installed:

- If you have an HXU-357—DS3, see "Placing the Line Unit in Service Using an HXU-357 Multiplexer" below.
- If you have an HXU-358—DS3 (T1/E1), see "Placing the Line Unit in Service Using an HXU-358 Multiplexer" on page 69.
- If you have an HXU-359—STS-1, see "Placing the Line Unit in Service Using an HXU-359 Multiplexer" on page 71.
- If you have an HXU-369—OC-3, see "Placing the Line Unit in Service Using an HXU-369 Multiplexer" on page 73.

Placing the Line Unit in Service Using an HXU-357 Multiplexer

Step	Procedure	Installer Check ✓
	The following procedure assumes proper TAO login. For proper login procedure, please refer to "Using the Terminal Access Option" on page 32.	
1	Access the HXU-357 Root Menu from the Shelf Status menu by pressing M and then the password.	❒
2	Press 7 to select DS1 Equip/Unequip and then press ENTER.	❒
3	Type the number of the channel line (or select all channel lines) and then press ENTER.	❒
4	Press 1 to select SET STATE TO (E)QUIPPED and then press ENTER.	❒
5	Press ESC to return to the Shelf Status menu.	❒
6	Press 1 to select Configuration Management and then press ENTER.	❒
7	Press 6 to select Service Mode and then press ENTER.	❒
8	Press 2 to select DS1 Service Mode and then press ENTER.	❒
9	Type the number of the channel line (or select all channel lines) and then press ENTER.	❒
10	Press 1 to select (I)N SERVICE and then press ENTER.	❒
11	Press CTRL + P to return to the Configuration Management menu.	❒
12	Proceed to "Enabling Alarms for Systems Using an HXU-357 Multiplexer" on page 68.	❒

Installer Signature ✍	Date

HXU-357

Enabling Alarms for Systems Using an HXU-357 Multiplexer

Step	Procedure	Installer Check ✓
1	From the Shelf Options screen, press **A** to select Alarm Management. The following prompt appears: `Which Line Unit do you want to change the alarm settings on (1-28). (E)nable All, (D)isable All`	❒

2	Type the slot number of the line unit you want to enable. When you type a slot number (*x*), one of the following prompts appears.
	`Do you want to ENABLE alarm settings for Line Unit x (Y/N)`
	`Do you want to DISABLE alarm settings for Line Unit x (Y/N)`
	To verify that a line card is managed, press ESC until you return to the Shelf Status screen. All unmanaged cards will have an asterisk next to the slot number (1 through 28).
		❒

3	Press an appropriate **Y** or **N** response for the alarm setting you are changing.	❒
4	If you plan to install a test card, proceed to "Installing a Test Card (HTC) (Optional)" on page 76. If you plan to install a cut-through card, proceed to "Installing a Cut-through Card (HCC) (Optional)" on page 77. The Wideband 3190 should now be operational. If you experience any difficulties at this time, refer to "Troubleshooting and System Testing" on page 74.	❒

Installer Signature ✍	Date

HXU-357

Placing the Line Unit in Service Using an HXU-358 Multiplexer

Step	Procedure	Installer Check ✓
	The following procedure assumes proper TAO login. For proper login procedure, please refer to "Using the Terminal Access Option" on page 32.	
1	From the Shelf Options screen, select **M**.	❒
2	Select the **Config** menu and then press **ENTER**.	❒
3	Select the **T1/E1 Ports** menu and then press **ENTER**.	❒
4	Select the Port #, use the **SPACEBAR** to select IN-SRVC, and then press **ENTER**.	❒
5	Press **ESC** to return the Shelf Status menu.	❒
6	Proceed to "Enabling Alarms for Systems Using an HXU-358 Multiplexer" on page 70.	❒

Installer Signature ✍	Date

Once a line is placed In Service under the HXU Configuration Management menu, its provisioning cannot be changed. To reprovision a line, place it in maintenance mode (Unequipped and Out-of-Service). This does not affect changing DS1 parameters under the HLU Maintenance Terminal menu.

HXU-358

Enabling Alarms for Systems Using an HXU-358 Multiplexer

Step	Procedure	Installer Check ✓
1	From the Shelf Options screen, press A to select Alarm Management. The following prompt appears: `Which Line Unit do you want to change the alarm settings on (1-28). (E)nable All, (D)isable All`	❒

2	Type the slot number of the line unit you want to enable. When you type a slot number (*x*), one of the following prompts appears.
	`Do you want to ENABLE alarm settings for Line Unit x (Y/N)`
	`Do you want to DISABLE alarm settings for Line Unit x (Y/N)`
		❒

3	Press an appropriate Y or N response for the alarm setting you are changing.	❒
4	If you plan to install a test card, proceed to "Installing a Test Card (HTC) (Optional)" on page 76. If you plan to install a cut-through card, proceed to "Installing a Cut-through Card (HCC) (Optional)" on page 77. The Wideband 3190 should now be operational. If you experience any difficulties at this time, refer to "Troubleshooting and System Testing" on page 74.	❒

Installer Signature ✍	Date

HXU-358

Placing the Line Unit in Service Using an HXU-359 Multiplexer

Step	Procedure	Installer Check ✓
	The following procedure assumes proper TAO login. **For proper login procedure, please refer to "Using the Terminal Access Option" on page 32.**	
1	From the Shelf Options screen, select **M**.	❒
2	Select the **Config** menu and then press **ENTER**.	❒
3	Select the line unit, use the **SPACEBAR** to select IN-SRVC, and then press **ENTER**. Confirm that the settings for Type, Code, LBO, LBK, VTG, and VTS are appropriate.	❒
4	Proceed to "Enabling Alarms for Systems Using an HXU-359 Multiplexer" on page 72.	❒

Installer Signature ✍	Date

HXU-359

Enabling Alarms for Systems Using an HXU-359 Multiplexer

Step	Procedure	Installer Check ✓
1	From the Shelf Options screen, press A to select Alarm Management. The following prompt appears: `Which Line Unit do you want to change the alarm settings on (1-28). (E)nable All, (D)isable All`	❒

2	Type the slot number of the line unit you want to enable. When you type a slot number (*x*), one of the following prompts appears.
	`Do you want to ENABLE alarm settings for Line Unit x (Y/N)`
	`Do you want to DISABLE alarm settings for Line Unit x (Y/N)`
		❒

3	Press an appropriate Y or N response for the alarm setting you are changing.	❒
4	If you plan to install a test card, proceed to "Installing a Test Card (HTC) (Optional)" on page 76. If you plan to install a cut-through card, proceed to "Installing a Cut-through Card (HCC) (Optional)" on page 77. The Wideband 3190 should now be operational. If you experience any difficulties at this time, refer to "Troubleshooting and System Testing" on page 74.	❒

Installer Signature ✍	Date

HXU-359

Placing the Line Unit in Service Using an HXU-369 Multiplexer

Step	Procedure	Installer Check ✓
	The following procedure assumes proper TAO login. For proper login procedure, please refer to "Using the Terminal Access Option" on page 32.	
1	From the Shelf Options screen, select **M**.	❒
2	Select the **Config** menu and then press **ENTER**.	❒
3	Select the line unit, use the **SPACEBAR** to select IN-SRVC, and then press **ENTER**.	❒
4	Proceed to "Enabling Alarms for Systems Using an HXU-369 Multiplexer".	❒

Installer Signature ✍	Date

Enabling Alarms for Systems Using an HXU-369 Multiplexer

Step	Procedure	Installer Check ✓
1	From the Shelf Options screen, press **A** to select Alarm Management. The following prompt appears: `Which Line Unit do you want to change the alarm settings on (1-28). (E)nable All, (D)isable All`	❒

2	Type the slot number of the line unit you want to enable. When you type a slot number (*x*), one of the following prompts appears.
	`Do you want to ENABLE alarm settings for Line Unit x (Y/N)`
	`Do you want to DISABLE alarm settings for Line Unit x (Y/N)`
		❒

3	Press an appropriate **Y** or **N** response for the alarm setting you are changing.	❒
4	If you plan to install a test card, proceed to "Installing a Test Card (HTC) (Optional)" on page 76. If you plan to install a cut-through card, proceed to "Installing a Cut-through Card (HCC) (Optional)" on page 77. The Wideband 3190 should now be operational. If you experience any difficulties at this time, refer to "Troubleshooting and System Testing" on page 74.	❒

Installer Signature ✍	Date

HXU-369

TROUBLESHOOTING AND SYSTEM TESTING

Figure 41 shows system loopbacks and test access points. You can do additional system tests through test cards (see "Installing a Test Card (HTC) (Optional)" on page 76). You can route multiplexer output to provide local access to any DS1 or E1 channel on the DS3 transport at an electrical DSX-1 or E1 cross-connect point using cut-through Cards (see "Managing Alarms" on page 79).

Removal and replacement of line units should not be your first approach to troubleshooting. You will lose important performance management information which may help you resolve a line problem. Before making a call to Product Support, read the Performance Management history and conduct voltmeter tests for leakage to determine if the source of trouble is a marginal line or a facility problem.

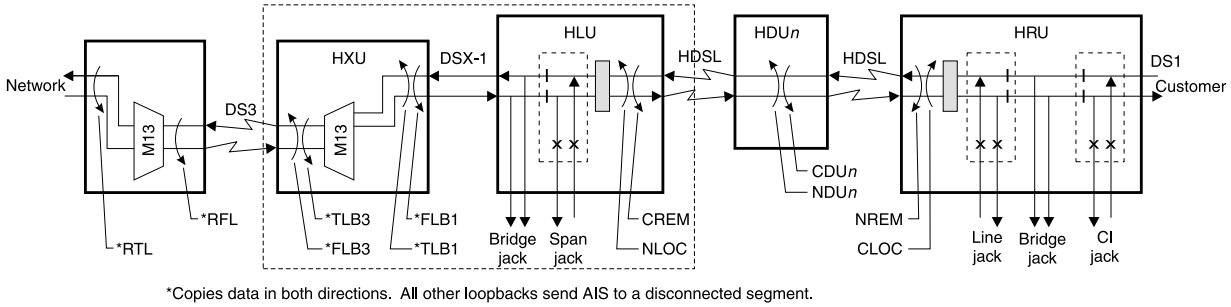

Figure 41. *System Loopbacks and Test Access*

Table 9. *System Loopback Definitions*

Test Point	Loopback Definition
TLB3 [(a) (b)]	Terminal loopback to the customer at the DS3 line. Activate from the HXU-358 Test menu.
FLB3 [(a) (b)]	Facility loopback to the network at the DS3 line. Activate from the HXU-358 Test menu.
TLB1 [(a) (b)]	Terminal Loopback to the network at the DSX-1 line. Activate from the HXU-358 Test menu.
FLB1 [(a) (b)]	Facility loopback to the customer at the DSX-1 line.
RFL [(a) (b)]	Remote facility loopback from the far-end DS3 line. Activate from the HXU-358 Test menu.
RTL [(a) (b)]	Remote terminal loopback from the far-end DSX-1 line. Activate from the HXU-358 Test menu.
CREM	Customer remote loopback is activated by selecting the line unit on the Shelf Status Screen and then the **Loopback Mode** selection from the HLU Maintenance Terminal Main Menu.
NLOC	Network local loopback is activated by selecting the line unit on the Shelf Status screen and then the **Loopback Mode** selection from the HLU Maintenance Terminal Main Menu.
CDU*n* [(c)]	Customer doubler *n* loopback is activated by selecting the line unit on the Shelf Status screen and then the **Loopback Mode** selection from the HLU Maintenance Terminal Main Menu.
NDU*n* [(c)]	Network doubler *n* loopback is activated by selecting the line unit on the Shelf Status screen and then the **Loopback Mode** selection from the HLU Maintenance Terminal Main Menu.
CLOC	Customer local loopback is activated by selecting the line of the Shelf Status screen and then the **Loopback Mode** selection from the HLU Maintenance Terminal Main Menu.
NREM	Network remote loopback is activated by selecting the line on the Shelf Status Screen and then the **Loopback Mode** selection from the HLU Maintenance Terminal Main Menu.

(a) To perform this loopback command, the DS3 and T1/E1 ports can be in any mode other than IN-SRVC.
(b) Copies data in both directions. All other loopbacks send AIS to a disconnected segment.
(c) The number of the doubler.

INSTALLING A TEST CARD (HTC) (OPTIONAL)

The HTC-319 Test Card provides you with an easy method of testing Central Office (CO) and Field Tip and Ring transmit and receive pairs.

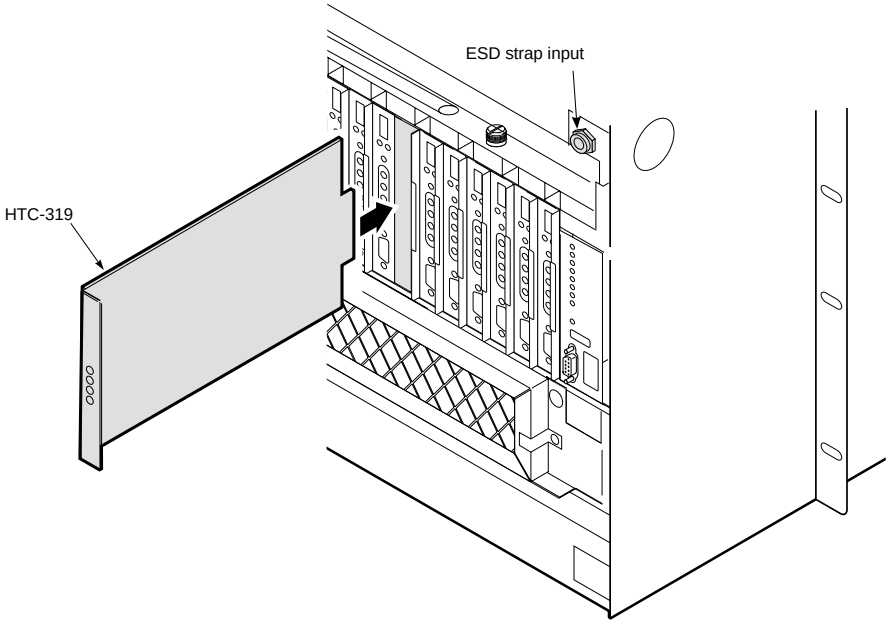

Figure 42. *Installing a Test Card into the HMS-358*

Step	Procedure	Installer Check ✓
	Whenever installing or removing units from the HMS-358 chassis, be sure to wear an antistatic wrist strap and connect it to the ESD strap input.	
1	If you have not already done so, open the chassis front cover by unscrewing the two hold-down lugs on the upper corners. The cover folds down.	❒
2	Be sure to plug your ESD wrist strap into the ESD above the HMU slot.	❒
3	Plug the HTC-319 into the shelf slot whose circuit you want to test.	❒
4	Set the four-position slide switch (S1) on the HTC-319 to the type of test you want to perform (LOOP BACK, LOOP THRU, SHORT, or OPEN).	❒
5	Monitor the circuit at the corresponding test points on the card. The number of each test point corresponds to the edge connector pin of the circuit under test.	❒
6	When testing is complete, remove the test card, close the front cover, and then screw in the two hold-down lugs.	❒
7	If you plan to test a line unit, proceed to "Line Unit Testing" on page 78. The Wideband 3190 should now be operational. If you experience any difficulties at this time, refer to "Troubleshooting and System Testing" on page 74.	❒

Installer Signature ✍	Date

INSTALLING A CUT-THROUGH CARD (HCC) (OPTIONAL)

The HCC-319 Cut-through card allows you to route the output of multiplexers to HDSL lines.

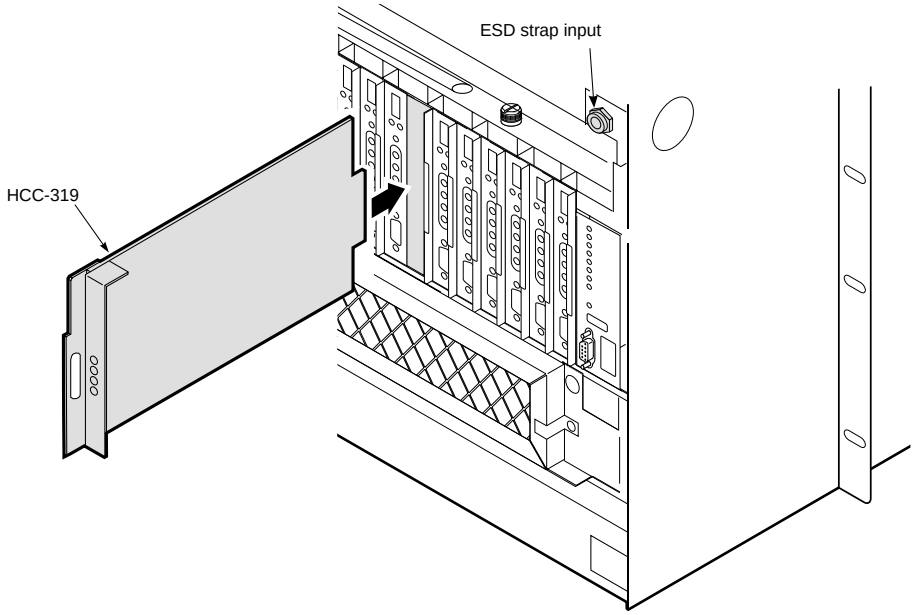

Figure 43. *Installing a Cut-through Card into the HMS-358*

Step	Procedure	Installer Check ✓
	Whenever installing or removing units from the HMS-358 chassis, be sure to wear an antistatic wrist strap and connect it to the ESD strap input.	
1	If you have not already done so, open the chassis front cover by unscrewing the two hold-down lugs on the upper corners. The cover folds down.	❒
2	Be sure to plug your ESD wrist strap into the ESD above the HMU slot.	❒
3	Plug the HCC-319 into the shelf slot whose circuit you want to test.	❒
4	Connect standard T1/E1 test equipment to access jack on the front panel to monitor the line.	❒
5	If you plan to test a line unit, proceed to "Line Unit Testing" on page 78. The Wideband 3190 should now be operational. If you experience any difficulties at this time, refer to "Troubleshooting and System Testing" on page 74.	❒

Installer Signature ✍	Date

LINE UNIT TESTING

Once the line unit is installed, verify that it is operating properly. To do this, monitor the following:

- Status LED
- Messages reported by the front-panel display.

Verification without a Downstream Device

If there is no downstream device installed:

Step	Procedure
1	Verify that the line unit powers up. The front-panel display illuminates and reports status messages.
2	Verify that the line unit attempts to communicate with downstream devices (status LED flashes red). Even if a downstream device is not present, the following events should occur: • The front-panel display reports various four-character status messages. • The line unit again attempts communication until a downstream device is detected.

Verification with a Downstream Device

If a downstream device has been installed:

Step	Procedure
1	Verify that the line unit powers up. (The front-panel display illuminates and reports various status messages.)
2	Verify that the line unit attempts to communicate with downstream devices (status LED flashes red): • If downstream devices are successfully identified and the HDSL2 loop synchronizes, the line unit status LED lights a steady green. The line unit reports normal margin messages on the front-panel display. • If downstream devices are not successfully identified, the line unit reports status messages. The line unit attempts communication again and reports four-character status messages until a downstream device is detected.
3	If a remote unit is installed, verify that the last span synchronizes normally. The line unit status LED should light a steady green and the front-panel display should report normal margin messages.
4	Verify that a valid DS1 signal has been applied to the line unit and the remote unit. • If no DS1 signal is being applied to either the line unit or the remote unit inputs, then the appropriate DS1 alarms (LLOS or RLOS) display on the front panel and the status LED flashes red. • If a valid DS1 signal is being supplied to the line unit and remote unit, then DS1 alarm indications should be absent and the status LED lights a steady green.
5	If you need more information on managing line units, see the technical practice for the respective unit. If you need more information on managing alarms, see "Managing Alarms" on page 79.

MANAGING ALARMS

The Wideband 3190 system reports alarms from the shelf, the line units, the fan assembly and the multiplexer unit.

The HMS-358 displays an alarm summary on the HMU at all times. Any alarm that exists in the system is represented by a critical, major or minor alarm LED on the HMU front panel. The alarm LEDs on each HLU in the system provide additional fault isolation. In general, the HLU or HXU with an active red alarm LED is the unit directly associated with a fault.

The M13 function is provided by two multiplexer cards wired in parallel. Both monitor the DS3 and DS1 interfaces and check for proper bit rate and line coding. If an error exists on these interfaces, both HXU cards issue an alarm. A missing HLU or HRU creates a faulty DS1 signal and causes the active and standby HXU to issue a line alarm. Unused ports on the multiplexer must be configured as Unequipped and Out-of-Service to prevent them from reporting alarms to the system.

For complete information on managing alarms, consult the quick installation guide and technical practice for each multiplexer in your system.

HMU ALARMS

The HMU-319 reports Critical, Major, and Minor alarms.

- CR: A critical alarm is generated if:
  - power to the shelf or one of the A/B feeds has been lost, causing the Visible and Audible Critical Alarms to be asserted.
  - shelf temperature exceeds 170°F / 77°C, causing the Visible and Audible Critical Alarms to be asserted.
  - the multiplexer reports a Critical alarm.
- MJ: A major alarm is generated if:
  - any line card issues a fuse alarm.
  - shelf temperature exceeds 113°F / 45°C.
  - the multiplexer reports a Major alarm.
- MN: A minor alarm is generated if:
  - there is loss of sync on an HDSL loop.
  - the multiplexer is enabled, but not present.
  - there is loss of T1 signal at either the line unit or remote unit.
  - the HDSL loop margin falls below the selected margin threshold.
  - the multiplexer reports a Minor alarm.

When any critical, major, or minor alarm occurs, the following events result:

- The HMU activates the appropriate audio and visual alarm relay circuits. These alarm relay circuits activate an external audio or visual alarm, if connected as discussed.
- The appropriate alarm LEDs light on the HMU front panel.
- The management interface displays the alarm status on the Shelf Status screen (after the screen is updated).

To silence the alarm, do one of the following:

- Press the ACO pushbutton on the front panel of the HMU.
- Press the external ACO pushbutton (if installed).

The following events occur:

- The front panel ACO LED lights and remains lit until the original alarm is cleared or until another alarm occurs.
- The audio alarm relay circuits are disabled, causing any connected audio alarms to turn off.

HXU ALARMS

The HXU reports Critical, Major, Minor and Far End alarms to the HMU.

- CRITICAL: The HXU reports a critical alarm if it detects:
  - a critical service-affecting fault.
  - more than four faulty DS1 inputs.
- MAJOR: A major alarm is generated if the HXU detects:
  - up to four faulty DSX-1 lines.
  - more than five faulty DS1 inputs.
  - a major service-affecting fault.
- MINOR: The HXU reports a minor alarm if it detects:
  - a potential service-affecting fault condition.
  - a DS3 Far-End alarm.
  - a low-speed loopback.
  - a DS3 loopback.
- ABNORMAL: The HXU reports an Abnormal alarm if it detects:
  - DS3 Receive condition (AIS or Idle).
  - DS1 transmit LOS condition.
  - Power A or Power B alarm.
- FAR END: The HXU reports a Far End alarm if the far end of the DS3 has an alarm.

LINE UNIT ALARMS

The Shelf Status menu reports the alarm status for each line unit. This includes both physical alarms (LOS ALARM BUS and FUSE ALARM BUS) as well as alarm messages shown in Table 10.

The LOS ALARM BUS field on the Shelf Status menu indicates when any unmanaged line unit (or any other non-manageable card installed in the shelf) is reporting a minor alarm on pin H of the line unit edge connector. Refer to the shelf and line unit technical practices for information on using pin H.

The FUSE ALARM BUS field on the Shelf Status menu indicates when any line unit (or any other card installed in the shelf) is reporting a fuse alarm on pin 10 of the line unit edge connector. Refer to the shelf and line unit technical practices for information on pin 10.

The line unit H1ES, H2ES, and DS1 Errored Seconds Threshold alarms are not supported by the Shelf Status menu. If any of these conditions exist on a line unit, the line unit status indicates NORMAL. For this reason, use of the line unit Errored Seconds Threshold alarm option is not recommended. Refer to the line unit documentation for instructions on setting the Errored Seconds Threshold option.

Table 10. *Line Unit Alarm Messages*

Alarm Message	Definition	Description
LOSW	Loss Of Sync Word	Loss of signal on an HDSL span.
RLOS	Remote Loss Of Signal	Loss of DS1 signal at the remote unit.
LLOS	Local Loss Of Signal	Loss of DSX-1 signal at the line unit.
MAL1, MAL2	Margin Alarm 1, Margin Alarm 2	Loop margin has dropped below the user-set, minimum threshold level.
NORMAL		No alarm condition exists.
UNKNOWN		Line unit failed to respond to status requests.

Enable the ALM (alarm) option of an unmanaged line unit to allow the unit to trigger an alarm on pin H of the shelf connector (the LOS Alarm Bus). A managed HLU initiates an HMU alarm message over the digital management bus between the HLU and HMU. An unmanaged HLU or a T1 repeater triggers the HMU alarm by driving the LOS Alarm Bus to ground. Refer to the line unit's documentation for instructions on enabling the ALM option.

NETWORK SPECIFICATIONS

NETWORK ADDRESSES

ADC uses the standard Transmission Control Protocol/Internet Protocol (TCP/IP) on an Ethernet interface to send internal management information between chassis. The HMS-358 can support up to 32 chassis using a low-cost 10BASE-T twisted pair or 10BASE-2 coaxial cable Local Area Network (LAN). If only TAO software is used and there is no need to download multiplexer software, then either type of cable can be used. Systems that use TL1 or require download functions must use 10BASE-T. Additionally, larger systems using 10BASE-T require less troubleshooting than larger systems using other LAN protocols.

ADC recommends placing the HMS-358 on its own LAN. Any connection to a larger network should be done through a router with the appropriate firewall protection. Selecting the IP address, subnet mask, TCP/IP server address and trap addresses are basically arbitrary, but some understanding of these functions is still required to make an informed choice.

HARDWARE ADDRESSES AND IP ADDRESSES

To communicate, physical networks rely on 48-bit hardware addresses known as Media Access Control (MAC) addresses. Every network interface adapter has a unique hardware address assigned by the manufacturer and coded into the circuitry. On a local network, each piece of equipment picks up data which is addressed to it. In order for one device to send data to another, it must know the hardware address of the destination device. This works fine for small networks, where devices can easily broadcast their names and addresses on the network and make it easy to find them, but it does not work well for large networks or for communication between devices on different networks.

To solve this problem, a higher level of address, called an IP address, is used to identify each device in the internet. IP addresses, unlike hardware addresses, are not burned into the electronics, but are configured in software when a device is set up and plugged into a particular network. Each IP address is associated with a particular hardware device. For example, a HMS-358 shelf has two components that have IP addresses—the HXU-357 and the HMU-319. Both HXUs share the same IP address using an automatic protection scheme. The IP address is a 32-bit digital address arranged as four 8-bit words, each from 0 to 255, separated by a period.

The IP address consists of two parts: the network ID (netid) and the host ID (hostid). The subnet mask determines which bits form the netid and hostid addresses. (See Table 11.)

Table 11. *Network Addressing*

Subnet Mask	Class C
11111111 11111111 11111111 00000000	
255.255.255.0	
IP Address	Class C
← *netid* → ← *hostid* →	
110nnnnn nnnnnnnn nnnnnnnn hhhhhhhh	
200.200.200.1	

SUBNET MASK

A subnet is a physically separate part of a network, usually representative of all the devices at one geographic location or on the same LAN. The subnet mask is a quantity which is logically ANDed with an IP address to enable a device to determine which IP addresses are located on the local network and which addresses must go to the gateway for forwarding. An IP address of 200.200.200.1 and a subnet mask of 255.255.255.0, for example, indicate that only IP addresses, which start with 200.200.200, can be found on the local physical network, and that all other addresses must go through the gateway. (255 is the decimal representation of 8 bits of all ones.)

The subnet mask is also a 32-bit word, but it is generally a string of ones followed by a string of zeroes. Each subnet bit that has a one value identifies a corresponding bit of the IP address that is part of the netid. The zero bits identify the hostid. The netid is further divided into five classes from A to E. Table 11 shows a Class C network address. Class C is recommended for most HMS-358 applications. All Class C addresses are identified by the first three bits (110). The hostid should not be assigned all ones or all zeroes.

Using the foregoing restrictions and conventions, a HMS-358 can be assigned any IP address that meets your needs, provided that it is on its own LAN and separated from any external network by a router. If this is not the case, then consult your system administrator. Table 12 provides some suggestions for addressing your system if it is on its own LAN. It shows a logical relationship between the HMU and HXU units within each chassis.

Table 12. *Sample Class C IP Address Plan for the HMS-358*

Suggested HMU Addressing for 1 to 32 Chassis	Suggested HXU Addressing for 1 to 32 Chassis
11001000 11001000 11001000 00000001 200.200.200.1 HMU chassis #1 255.255.255.0 Subnet mask	11001000 11001000 11001000 01100101 200.200.200.101 HXU chassis #1 255.255.255.0 Subnet mask
11001000 11001000 11001000 00100000 200.200.200.32 HMU chassis #32 255.255.255.0 Subnet mask	11001000 11001000 11001000 10000100 200.200.200.132 HXU chassis #32 255.255.255.0 Subnet mask

ROUTERS OR GATEWAYS

At the place where two or more physical networks interconnect is a device called a gateway or router that handles linking of networks and routing of data packets between the networks that are attached to the gateway. If a device can not find the hardware address associated with a particular IP address on its own local network, it sends the packet on to the gateway. When the packet arrives at the gateway, the gateway transfers the packet to the network of the destination device. The process by which the gateway or router links IP addresses to hardware addresses is called Address Resolution Protocol (ARP). Each forwarding of the packet from one device to another is called a hop. If the device that is to receive the data is not directly connected to any of the physical networks, which are connected to the gateway used by the sending device, it may take several hops for the packet to reach its destination. The destination may even be a port on another gateway connected to different physical networks.

TRAP IP ADDRESS

Trap IP addresses are used to report network alarms to network management. For the Wideband 3190, the trap IP addresses of the multiplexer cards must be identical to the IP address assigned to the HMU-319 card in the chassis.

Duplicate addresses can cause troublesome network problems. Never guess at an IP number or subnet masks when setting up a device. Always consult with your administrator to obtain proper values.

APPENDIX A - SYSTEM SPECIFICATIONS

INTERFACE SPECIFICATIONS

Figure 44 shows the wirewraps for the power access connector, which are accessible from the backplane when covers are removed.

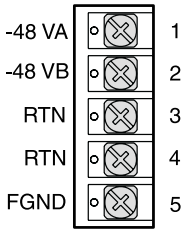

Figure 44. *Power Access Connector (Specification)*

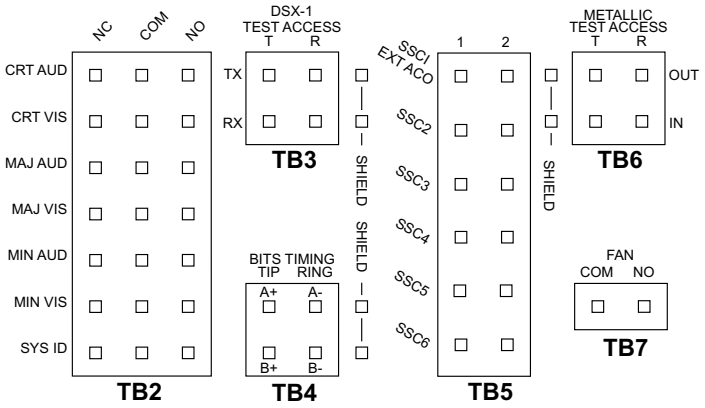

Figure 45. *Common Access Panel (Specification)*

All relay contacts are rated at 48 Vdc at 1A.

Table 13. *Relay Specifications*

Parameter	
Rated Load	0.5A at 125 Vac
Maximum switching capacity	62.5 VA, 33W
Contact type	bifurcated for high sensitivity

Table 14. *RJ-45 Pinout for 10BASE-T Interface to HMU (J34)* [(a)]

Pin	Description	
1	+XMT	output
2	-XMT	output
3	+RCV	input
6	-RCV	input

(a) Cable must be shielded category 5.

Table 15. *RS-232 DB-25 OSS Interface to HMU (DTE) - Male Connector* [(a)]

Pin	Description	
2	TD	output
3	RD	input
5	CTS	input
6	DSR	input
7	GND	input
15	TXCLK (DTE)	input
17	RXCLK (DCE)	input
20	DTR	output
24	TXCLK (DCE)	output

(a) Cable must be shielded.

Table 16. *RS-232 DB-25 HMU Craft Interface (DCE) - Female Connector*

Pin	Description	
2	RD	output
3	TD	input
4	DTR	input
5	GND	input
6	DSR	output
Cable must be shielded.		

Table 17. *RS-232 DB-25 AUX Interface to HMU (DTE)*

Pin	Description	
2	TD	output
3	RD	input
6	DSR	input
7	GND	input
20	DTR	output
Cable must be shielded.		

The RS-232 DB-25 AUX interface cannot be used when a multiplexer is present in the shelf.

ENVIRONMENTAL SPECIFICATIONS

The HMS-358 is designed to meet NEBS CO requirements.

Temperature (Min./Max.)	
Operational	32° to 122°F (0° to +50°C)
Non-operating	-40° to 140°F (-40° to +60°C)
Operational Altitude	197 ft. (60m) below sea level to 13,000 ft. (3962m) above sea level
Relative Humidity	
Operational	5 to 85% non-condensing
Short-term	5 to 90%
Non-operating	5 to 95%
Electromagnetic Compatibility	FCC Part 15, Class A, Subpart J; Bell TR EOP 000063, Section 4.10

PHYSICAL SPECIFICATIONS

Dimensions	12-$^{1}/_{8}$" H x 21-$^{3}/_{8}$" W x 11-$^{3}/_{4}$" D (30.8 x 54.3 x 30.5 cm)
Weight (unloaded)	37 lbs. (16.78 kg)
Chassis per 7-foot Rack	4
DS1 Capacity	28 lines
Power Feeds	-48 Vdc, A and B

POWER SPECIFICATIONS

CO Supply	-48 Vdc nominal (-41.5 Vdc to -56.5 Vdc)
Line Power to HDSL Remote Unit	-140 Vdc or ±112 Vdc

POWER REQUIREMENTS

Each system must be individually fused to support redundant power feeds. The HMS-357 List 4 provides a split-power backplane to limit the current requirements of each battery feed line to less than 20A for any configuration. The HMS-357 List 5 provides a diode-ORed feed that requires system configurations that are limited to 20A per feed. For this reason, each battery feed line must be individually fused. However, fuse requirements may be as low as 5A per fuse, depending upon the system configuration.

The power requirement for the shelf is characterized by three different measurements:

- **Current draw** is the actual current drawn from the -48 Vdc Office Battery by the system. This is useful in setting the requirements for shelf fusing. It is the total power consumption divided by the lowest office battery voltage anticipated (-42.5 Vdc).
- **Power consumption** is the total power used by the system and including the power fed to the remote locations.
- **Power dissipation** is that part of the total power that is consumed by the CO end of the system. It represents the CO heating and is useful in calculating the power density (watts per square foot) for CO equipment.

The requirements in GR-63-CORE for a typical six-lineup floor plan (Figure 46) of 12-inch deep frames (305 mm) places the natural convection heat dissipation at 1450 W/m^2 (134.7 W/ft^2). This is increased to 1950 W/m^2 if forced-air fans are used.

Each 23-inch (584m) rack occupies 0.654m^2 (7.03 Ft^2) of floor space. This allows 948W per rack without the optional fan assembly and 1275W with the fan assembly.

For a maximum load, each rack should contain no more than four HMS-357s. Higher rack densities can be obtained by installing the optional fan assembly in each system, by limiting the number of line doublers in each system, or by changing the floor lineup of the racks.

The Wideband 3190 has been designed to provide adequate convection cooling for an environment of 0°C to 50°C (32°F to 122°F) with up to 230W of internal heat dissipation.

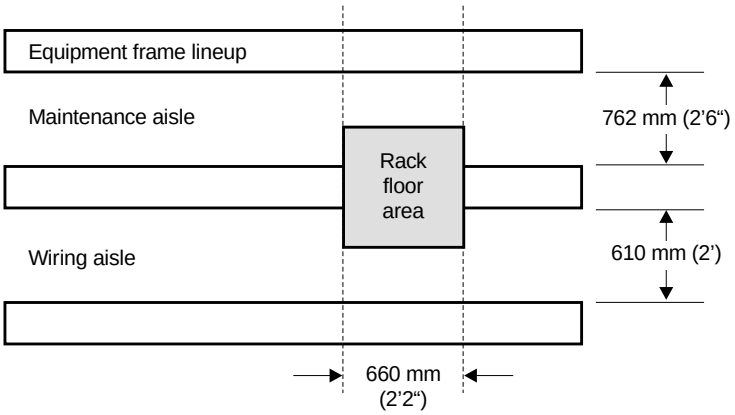

Figure 46. *Typical Six-Lineup Floor Plan*

To avoid complex calculations, use the following simplified power and fan requirements.

- If PairGain/ADC components are used and no CPE power is required, the Wideband 3190 chassis can power up to 12 doublers without necessitating the use of fans. (Recommended components include the HLU-319 List 5, HDU-409, and HRU-402.)
- Chassis configurations that do not use doublers do not require the use of fans. However, NEBS requirements may restrict the installation to four chassis per rack if no fans are used.

A/B Power Sources

Each chassis requires one A battery feed and one B battery feed rated at a maximum of 30A total for fully loaded chassis assemblies capable of driving a full complement of doublers and remote units.

The A/B power feeds provide total backup power for the HXU, HMU, and HFA cards. The HMU, HXU, and optional HFA have diode-ORed power feeds.

For the HMS-358 List 1 chassis, the line units are powered as a split feed with half of the line units on each battery feed. A loss of one battery feed forces 14 lines out of service. This reduces the maximum current required per battery feed for systems with the maximum number of doublers.

For the HMS-358 List 2 chassis, the line units are powered from the backplane through diode-ORed power feeds. A loss of one power feed will not affect service.

Fuses

System fuses are located in an external fuse tray typically mounted at the top of the CO rack. The HMU reports all fuse alarms within the HMS-358. Each chassis within the rack must be equipped with A and B fuses for proper power protection. Depending upon the system configuration, fuse ratings can vary from 5A to 20A. See Table 21 on page 91 for fuse selection information.

ADC does not recommend configurations in excess of 30 total per shelf.

To determine the power requirements of a CO rack, use the guidelines in the following tables:

- Table 20 on page 91 describes the power requirements of various line configurations (A through F) typically used in a network.
- Table 18 shows the power requirements of the common equipment needed for a protected HMS-357.
- Table 19 combines this information into the system power requirements for each configuration. Although the power requirements of the system can vary greatly depending on the line makeup, in practice the line makeup seldom requires more than 30% of the lines to have doublers. With this type of provisioning, power limitations due to CO heating is seldom a factor.

Table 18. *Common Equipment Power Consumption*

Equipment	Current Draw (mA)	Power Consumption (Watts)	Power Dissipation (Watts)
HXU-357 List 1 (2 units)	353 typ. 612 max.	15 typ. 26 max.	15 typ. 26 max.
HXU-358 List 1 (2 units)	353 typ. 612 max.	15 typ. 26 max.	15 typ. 26 max.
HMU-319 List 7	118 typ. 141 max.	5 typ. 6 max.	5 typ. 6 max.
HFA-357	250 typ. 306 max.	11 typ. 13 max.	12 typ. 13 max.
Total System Power Consumption	1074 typ. 1671 max.	46 typ. 71 max.	47 typ. 71 max.

Table 19. *Power Consumption and Power Dissipation for Multisystem Configurations*

Line Type as defined in Table 20	Four Systems (Watts)		Five Systems (Watts)		Six Systems (Watts)	
	Consumption	Dissipation	Consumption	Dissipation	Consumption	Dissipation
A	1048 typ. 1236 max.	688 typ. 833 max.	1310 typ. 1545 max.	859.4 typ. 1042 max.	1572 typ. 1855 max.	1031 typ. 1250 max.
B	1101 typ. 1294 max.	768 typ. 922 max.	1376 typ. 1618 max.	960 typ. 1153 max.	1651 typ. 1941 max.	1152 typ. 1383 max.
C	1583 typ. 1824 max.	850 typ. 1012 max.	1978 typ. 2280 max.	1062 typ. 1265 max.	2374 typ. 2736 max.	1275 typ. 1518 max.
D	2131 typ. 2428 max.	983 typ. 1143 max.	2664 typ. 3035 max.	1229 typ. 1429 max.	3197 typ. 3642 max.	1475 typ. 1714 max.
E	2747 typ. 3105 max.	1095 typ. 1264 max.	3434 typ. 3882 max.	1369 typ. 1580 max.	4121 typ. 4658 max.	1643 typ. 1896 max.
F	2837 typ. 3204 max.	1084 typ. 1252 max.	3546 typ. 4005 max.	1355 typ. 1565 max.	4255 typ. 4806 max.	1626 typ. 1878 max.

☐ These configurations require fans to meet NEBS. (230 W of heat dissipation per chassis, 948W per rack)

■ These configurations do not meet NEBS. The rack is limited to 1275 W of heat dissipation. The floor lineup must be changed to accommodate this configuration.

Table 20. *HDSL Transport Line Configurations*

Line Type	Line Units	Doubler Units	Number of Doublers per Line	Remote Units	Current Draw per Line (mA)	Power Consumption per Line (Watts)	Power Dissipation per Line (Watts)
A	HLU-319 List 5		0	HRU-402 List 1	182.0 typ. 200.2 max.	7.7 typ. 8.5 max.	4.5 typ. 4.9 max.
B	HLU-319 List 5		0	HRU-411 List 1	193.0 typ. 212.3 max.	8.2. 9.0 max.	5.2 typ. 5.7 max.
C	HLU-319 List 5	HDU-409 List 2	1	HRU-402 List 1	294.0 typ. 323.4 max.	12.5 typ. 13.8 max.	5.9 typ. 6.5 max.
D	HLU-319 List 5	HDU-409 List 2	2	HRU-402 List 1	410.0 typ. 451.0 max.	17.8 typ. 19.1 max.	7.1 typ. 7.8 max.
E	HLU-319 List 5	HDU-409 List 2	3	HRU-402 List 1	539.0 typ. 592.9 max.	22.9 typ. 25.2 max.	8.1 typ. 8.9 max.
F	HLU-319 List 5	HDU-409 List 2	4 [(a)]	HRU-402 List 1	557.0 typ. 612.7 max.	23.7 typ. 26.1 max.	8.0 typ. 8.8 max.

(a) Requires a locally powered HRU.

Table 21. *HMS-358 with Full Compliment of Card Types and Dual Multiplexers*

Line Type as defined in Table 20	List 4: A/B Fuse Split Feed @120%(Amps)	List 5: A/B Diode Feed @120% (Amps)	Current Draw from Office Battery (Amps)	Power Consumption (Watts)	Power Dissipation (Watts)
A	5	9	6.2 typ. 7.3 max.	262 typ. 309 max.	172 typ. 208 max.
B	6	9	6.5 typ. 7.6 max.	275 typ. 324 max.	192 typ. 231 max.
C	7	13	9.3 typ. 10.7 max.	396 typ. 456 max.	212 typ. 253 max.
D	10	17	12.6 typ. 14.3 max.	533 typ. 607 max.	246 typ. 286 max.
E	12	22	16.2 typ. 18.3 max.	687 typ. 776 max.	274 typ. 316 max.
F	12	23	16.7 typ. 18.8 max.	709 typ. 801 max.	271 typ. 313 max.

These configurations require fans to comply with the 230 W heat dissipation rating of our chassis.

For a 0°C to 50°C (32°F to 122°F) operating environment, a fan assembly is required for any of these situations:

- One system with ≥ 230W power dissipation
- Four systems with ≥ 948W power dissipation
- Extended temperature operation (65°C or 149°F)

No shelf configuration should exceed a total power dissipation ≥ 1275W.

APPENDIX B - TECHNICAL REFERENCE

COMPATIBILITY

The HMS-358 is an open platform based on the standard 3192 line card. As such, all 3192-compliant line cards operate within this shelf. However, due to FCC and NEBS testing guidelines, compliance is not guaranteed with all vendors when tested as a system. ADC has verified that all its standard line units are in compliance with these guidelines when tested as a system in our HMS-358 shelf. It is the customer's responsibility to verify that other vendor's equipment meets system-level compliance when installed in our chassis.

SYSTEM PRODUCTS

Table 22. *System Products*

Model Name	Description
Line Units	
HLU-319 List 1	HDSL line unit for 3190 T1 live interface, 3190 mechanics
HLU-319 List 2x	HDSL line unit for 3190 T1 live interface, 3190 mechanics
HLU-319 List 5x [(a)]	HDSL line unit for 3190 T1 live interface, 3190 mechanics
Doubler Units	
HDU-409[(a)]	HDSL doubler unit for 239 T1 repeater mechanics
HDU-407	HDSL doubler unit for DDS/ISDN single-slot
HDU-404	HDSL doubler unit for 400 mechanics, low power
HDU-451	HDSL doubler unit for 400 mechanics, low power
HDU-437	HDSL doubler unit for DDS/ISDN
Remote Units	
HRU-402[(a)]	HDSL remote unit for 200 mechanics
HRU-412	HDSL remote unit for 400 mechanics
Central Office Equipment	
HMS-358 List 1, List 2, List 3, List 4[(a)]	Wideband 3190 Chassis
HFA-357 List 1[(a)]	Optional fan assembly
HXU-357 List 1[(a)]	Multiplexer unit for DS3
HXU-358 List 1[(a)]	Multiplexer unit for DS3 (E1/T1)
HXU-359 List 1[(a)]	Multiplexer unit for STS-1
HXU-369 List 1[(a)]	Multiplexer unit for OC-3
HMU-319 List 7 or List 7A[(a)]	Management unit

(a) Recommended unit for Wideband System 3190.

COMPLIANCE STANDARDS

Table 23. *Compliance Standards*

Standard	Description
GR-499-CORE Issue 1, December 1995	Transport System Generic Requirements (TSGR): Common Requirements
GR-63-CORE Issue 1, October 1995	New Equipment-Building System (NEBS) Generic Equipment Requirements
GR-1089-CORE Issue 1, July 1994 Rev 1, December 1996	Electromagnetic Compatibility and electrical Safety Generic Criteria for Network Telecommunication Equipment
SR-3580, Level 3 NEBS	Bellcore's highest level of compliance for CO environment
TR-NWT TA-TSY-000199 Issue 4, November 1988	Specifications of Memory Administration Messages at the Operations System/Network Element Interface, Bellcore (TL1)
GR-454 TR-TSY-000454 Issue 1, July 1988	Supplier Documentation for Network Elements
FR-NWT-000482 TR-TSY-000482	OTGR, Operations Applications Messages Directory (TL1)
TR-TSY-000825 Issue 2, February 1988.	OTGR, User System Interface - User System Language, Bellcore (Craft interface and is compatible with TL1)
TR-TSY-000827 Issue 1, November 1988	OTGR, Generic Operations Interface: Non-OSI Communications Architecture, Bellcore (TPM1 is the minimum OSI stack with TP over X.25 and is used to carry TL1)
GR-833 TR-TSY-000833 Issue 2, February, 1988	OTGR, Operations Applications Messages - Network Maintenance: Network Element and Transport Surveillance Messages, Bellcore. (TL1)
GR-78 TR-NWT-000078 Issue 3, December 1991	Generic Physical Design Requirements for Telecommunication Products and Equipment
TR-TSY-000191 Issue 1, May 1986	Alarm Indication Signal Requirements and Objectives
PUB 49001 July 1982	Requirements for Compatibility or Telecommunication Equipment with Bell Systems Surveillance and Control Systems
PUB 49002 July 1982	General Remote Surveillance Philosophy and Criteria for Interoffice Transmission Equipment
ANSI T1.102-1987	Digital Hierarchy-Electrical Interfaces
ANSI T1.404-1989	Carrier to Customer Installation - DS3 Metallic Interface
ANSI T1.107-1988 ANSI T1.107a-1990	American National Standard for Telecommunication- Digital Hierarchy- Formats Specifications (DS3 format)

APPENDIX C - PRODUCT SUPPORT

ADC Customer Service Group provides expert pre-sales and post-sales support and training for all its products.

TECHNICAL SUPPORT

Technical support is available 24 hours a day, 7 days a week by contacting the ADC Wireline Systems Division Customer Service Engineering Group at one of the following numbers:

Telephone:	800.638.0031 or 714.730.3222 The 800 telephone support line is toll-free in the U.S. and Canada.
Fax:	714.832.9924
Email:	wsd_support@adc.com

A Customer Service Engineer answers technical assistance calls Monday through Friday between 7:30 AM and 5:30 PM, Pacific Time, excluding holidays. At all other times, an on-duty Customer Service Engineer returns technical assistance calls within 30 minutes.

RETURNS

To return equipment to ADC Wireline Systems Division:

1 Locate the number of the purchase order under which the equipment was purchased. You will need to provide this number to ADC Wireline Systems Division Customer Service to obtain a return authorization.

2 Call or write ADC Wireline Systems Division Customer Service to ask for a Return Material Authorization (RMA) number and any additional instructions. Use the telephone number, fax number, or email address listed below:

- Telephone: 800.370.9670
- Fax: 714.832.9923
- Email Address: rma@adc.com

3 Include the following information, in writing, along with the equipment you are returning:

- Company name, address, telephone number, and the name of a person Customer Service can contact regarding this equipment.
- The purchase order number provided to Customer Service when the RMA number was requested.
- A description of the equipment, as well as the number of units that you are returning. Be sure to include the model and part number of each unit.
- The shipping address to which Customer Service should return the repaired equipment.
- The reason for the return:
  - The equipment needs an ECO/ECN upgrade.
  - The equipment is defective.

If the equipment is defective, please tell us what you observed just before the equipment malfunctioned. Be as detailed in your description as possible.

- If there is another reason for returning the equipment, please let us know so we can determine how best to help you.

4 Pack the equipment in a shipping carton.

5 Write the ADC Wireline Systems Division address and the RMA number you received from Customer Service clearly on the outside of the carton and return to:

ADC Wireline Systems Division
14352 Franklin Ave.
Tustin, CA 92780-7013

Attention: **RMA (Number)**

All shipments are to be returned prepaid. ADC will not accept any collect shipments.

APPENDIX D - ABBREVIATIONS

A

ACO: Alarm Cutoff

AIS: Alarm Indication Signal

ALM: Alarm

AMI: Alternate Mark Inversion

ASCII: American Standard Code for Information Interchange

B

B8ZS: Binary 8 Zero Substitution

BER: Bit Error Rate

C

CDU: Customer Doubler

CLOC: Customer Local Loopback

CO: Central Office

CR: Critical Alarm

CREM: Customer Remote Loopback

D

DCE: Data Communication Equipment

DS3: Digital Signal, level Three

DSX-1: Digital Signal Cross-connect Level 1

DTE: Data Terminal Equipment

E

EMI: ElectroMagnetic Interference

ESD: Electrostatic Discharge

F

FGND: Frame Ground

FLB: Facility Loopback

H

HCA: HiGain Cable Assembly

HDSL: High-bit-rate Digital Subscriber Line

HFA: HiGain Fan Assembly

HLU: HiGain Line Unit

HMU: HiGain Management Unit

HRU: HiGain Remote Unit

HTC: HiGain Test Card

HXU: HiGain Multiplexer Unit

I

IP: Internet Protocol

IS: In-Service

L

LED: Light Emitting Diode

LIU: Line Interface Unit

LLOS: Local Loss of Signal

M

MAL1: Margin Alarm 1

MAL2: Margin Alarm 2

MDF: Main Distribution Frame

MJ: Major Alarm

MN: Minor Alarm

MOP: Method of Procedure

N

NDU: Network Loopback

NEBS: Network Equipment-Building System

NLOC: Network Local Loopback

NREM: Network Remote Loopback

O

OOS: Out of Service

R

RFL: Remote Facility Loopback

RLOS: Remote Loss of Signal

RTL: Remote Terminal Loopback

S

S1: Slide Switch

SID: Shelf Identifier

SSC2: Special Signaling Channel 2

STS-1: Synchronous Transport Signal Level -1

T

TAO: Terminal Access Option

TL1: Transaction Language 1

TLB: Terminal Loopback

TLOS: Transmit Loss of Signal

V

VTG: Virtual Tributary Group

VTS: Virtual Tributary Slot

PROJECT MEMBER SIGNATURES

Complete the following table by printing the title and name of each project member followed by their respective signatures. This list may then be removed and stored for future reference.

Table 24. *Signatures*

Title	Name	Signature ✍

INSTALLATION VERIFICATION BY SECTION

Reviewed Installation Plans

(see "Reviewing Installation Plans" on page 3)

Check ✓ if not applicable ❒

Shift Supervisor Signature ✍ Date

Established Method of Procedure

(see "Establishing a Method of Procedure" on page 3)

Check ✓ if not applicable ❒

Shift Supervisor Signature ✍ Date

Unpacked and Inspected System Components

(see "Unpacking and Inspecting the System Components" on page 4)

Check ✓ if not applicable ❒

Shift Supervisor Signature ✍ Date

Verified Presence of Proper Tools and Supplies

(see "Before You Begin" on page 3)

Check ✓ if not applicable ❒

Shift Supervisor Signature ✍ Date

Reviewed Safety Precautions

(see "Safety Warnings and Notices" on page iv)

Check ✓ if not applicable ❒

Shift Supervisor Signature ✍ Date

Mounted Chassis

(see "Mounting the Chassis" on page 6)

Check ✓ if not applicable ❒

Shift Supervisor Signature ✍ Date

Installed LIU Module B

(see "Installing the LIU, Module B for the HXU-357 Multiplexer" on page 8)

Check ✓ if not applicable ❒

Shift Supervisor Signature ✍ Date

Cabled Chassis

(see "Cabling the Chassis" on page 9) Check ✓ if not applicable ❒

Shift Supervisor Signature ✍	Date

Wired Common Access Panel

(see "Wiring the Common Access Panel" on page 18) Check ✓ if not applicable ❒

Shift Supervisor Signature ✍	Date

Connected Ground Cable

(see "Installing the Power Cables" on page 19) Check ✓ if not applicable ❒

Shift Supervisor Signature ✍	Date

Connected Power Cables

(see "Installing the Power Cables" on page 19) Check ✓ if not applicable ❒

Shift Supervisor Signature ✍	Date

Connected to Network Interface

(see "Connecting the Network Interface" on page 22) Check ✓ if not applicable ❒

Shift Supervisor Signature ✍	Date

Installed Management Unit

(see "Installing Multiplexers" on page 37) Check ✓ if not applicable ❒

Shift Supervisor Signature ✍	Date

Installed Multiplexer(s)

(see "Installing Multiplexers" on page 37) Check ✓ if not applicable ❒

Shift Supervisor Signature ✍	Date

Installed Fan Assembly

(see "Installing a Fan Assembly (Optional)" on page 61) Check ✓ if not applicable ❒

Shift Supervisor Signature ✍	Date

Installed Line Card(s)

(see "Installing a Line Unit (HLU)" on page 63) Check ✓ if not applicable ❒

Shift Supervisor Signature ✍	Date

Installed Remote Unit(s)

(see "Installing a Remote Unit (HRU)" on page 64) Check ✓ if not applicable ❒

Shift Supervisor Signature ✍	Date

Set Up Circuit ID(s)

(see "Setting Up Circuit IDs" on page 65) Check ✓ if not applicable ❒

Shift Supervisor Signature ✍	Date

Placed Line(s) In Service

(see "Placing the Line Unit in Service at the HXU" on page 67) Check ✓ if not applicable ❒

Shift Supervisor Signature ✍	Date

INDEX

Numerics

A

B

C

D

E

F

G

H

I

L

M

CERTIFICATION AND WARRANTY

FCC COMPLIANCE

This equipment has been tested and found to comply with the limits for a Class A digital device, pursuant to Part 15 of the FCC Rules. These limits are designed to provide reasonable protection against harmful interference when the equipment is operated in a commercial environment. This equipment generates, uses, and can radiate radio frequency energy and, if not installed and used in accordance with the instruction manual, may cause harmful interference to radio communications. Operation of this equipment in a residential area is likely to cause harmful interference in which case the user will be required to correct the interference at his own expense.

LIMITED WARRANTY

ADC DSL Systems, Incorporated ("ADC") warrants that, for a period of sixty (60) months from the date of shipment, the hardware portion of its products will be free of material defects and faulty workmanship under normal use. ADC's obligation, under this warranty, is limited to replacing or repairing, at ADC's option, any such hardware product which is returned during the 60-month warranty period per ADC's instructions and which product is confirmed by ADC not to comply with the foregoing warranty.

ADC warrants that, for a period of 90 days from the date of purchase, the software furnished with its products will operate substantially in accordance with the ADC published specifications and documentation for such software. ADC's entire liability for software that does not comply with the foregoing warranty and is reported to ADC during the 90-day warranty period is, at ADC's option, either (a) return of the price paid or (b) repair or replace of the software. ADC also warrants that, for a period of thirty (30) days from the date of purchase, the media on which software is stored will be free from material defects under normal use. ADC will replace defective media at no charge if it is returned to ADC during the 30-day warranty period along with proof of the date of shipment.

The transportation charges for shipment of returned products to ADC will be prepaid by the Buyer. ADC will pay transportation charges for shipment of replacement products to Buyer, unless no trouble is found (NTF), in which case the Buyer will pay transportation charges.

ADC may use reconditioned parts for such repair or replacement. This warranty ***does not*** apply to any product which has been repaired, worked upon, or altered by persons not authorized by ADC or in ADC's sole judgment has been subjected to misuse, accident, fire or other casualty, or operation beyond its design range.

Repaired products have a 90-day warranty, or until the end of the original warranty period—whichever period is greater.

ADC DISCLAIMS ALL OTHER WARRANTIES, EITHER EXPRESS OR IMPLIED, INCLUDING BUT NOT LIMITED TO IMPLIED WARRANTIES OF MERCHANTABILITY AND FITNESS FOR A PARTICULAR PURPOSE, WITH RESPECT TO ITS PRODUCTS AND ANY ACCOMPANYING WRITTEN MATERIALS. FURTHER, ADC DOES NOT WARRANT THAT SOFTWARE WILL BE FREE FROM BUGS OR THAT ITS USE WILL BE UNINTERRUPTED OR REGARDING THE USE, OR THE RESULTS OF THE USE, OF THE SOFTWARE IN TERMS OF CORRECTNESS, ACCURACY, RELIABILITY OR OTHERWISE.

MODIFICATIONS

Any changes or modifications made to this device that are not expressly approved by ADC DSL Systems, Inc. voids the user's warranty.

All wiring external to the products should follow the provisions of the current edition of the National Electrical Code.

STANDARDS COMPLIANCE

This equipment has been tested and verified to comply with the applicable sections of the following standards:

- GR 63-CORE - Network Equipment-Building System Requirements: Physical Protection
- GR 1089-CORE - Electromagnetic Compatibility and Electrical Safety

For technical assistance, refer to "Appendix C - Product Support" on page 94.

ADC DSL Systems, Inc.

14402 Franklin Avenue
Tustin, CA 92780-7013

Tel: 714.832.9922
Fax: 714.832.9924

Technical Assistance

800.638.0031
714.730.3222

DOCUMENT CATALOG NUMBER
LTPH-SM-1014-03, ISSUE 1

1144735